unisystem

UST070HSMNNN00

7.0" IPS LCD-TFT MODULE SPECIFICATION

Passion for displays

Key Specifications

Parameter	Specification
LCD Type	IPS TFT / Transmissive / Normal Black
Size (Diagonal)	7.0"
Viewing Direction	Full Viewing (All)
Outside Dimensions (W x H x D)	165.00 x 100.00 x 6.85 mm
Active Area (W x H)	154.21 x 85.92 mm
Pixel Pitch (W x H)	0.1506 x 0.1432 mm
Resolution	1024 x 600 (RGB)
Brightness	2000 cd / m^2 (typ.)
Contrast Ratio	1000:1 (typ.)
Color Depth	16.7 M
Pixel Arrangement	RGB Vertical Stripe
Interface	MIPI DSI
LCD Driver	JD9165BA
With / Without Touch	Without Touch Panel
Surface Treatment	Glare
Operating / Storage Temp.	-20°C ~ +70°C / -30°C ~ +80°C
Weight	TBD

Revision Table

Rev.	Date	Description
1.0	2026-10-13	First issue

Contents

1. Coding System 4
2. Mechanical Drawing 5
3. Absolute Maximum Ratings 6
4. DC Characteristics 6
5. Backlight Characteristics 6
6. Optical Characteristics 7
6.1 Optical Specifications 7
6.2 Definition of Response Time 7
6.3 Definition of Contrast Ratio 8
6.4 Definition of Viewing Angles 9
6.5 Definition of Color Appearance 9
6.6 Definition of Surface Luminance, Uniformity and Transmittance 10
7. Block Diagram and Power Supply 10
8. Interface Pins Definition 11
9. Timing Characteristics 12
9.1 MIPI Input Timing Table 12
9.2 MIPI Video Input Timing 13
9.3 MIPI Low Power Transmitter AC Specification 13
9.4 MIPI Low Power Turnaround Procedure 14
9.5 MIPI High Speed AC Characteristics 15
9.6 MIPI Data-Clock Timing Specification 17
10. Quality Assurance 17
10.1 Purpose 17
10.2 Standard for Quality Test 17
10.3 Agreement Items 17
10.4 Standard of the Product Visual Inspection 18
10.5 Inspection Specification 18
10.6 Classification of Defects 22
10.7 Identification / Marking Criteria 22
10.8 Packing 22
11. Reliability Specification 23
12. Precautions 24
12.1 Safety 24
12.2 Handling 24
12.3 Storage 24
12.4 Operation 24
12.5 Static Electricity 24
13. Legal Information 25
14. Contact Information 26

1. Coding System

1	2	3	4	5	6	7	8	9	10
US	**T**	**070**	**H**	**S**	**M**	**N**	**N**	**N**	**00**

No.	Parameter	Options
1	Manufacturer	Unisystem
2	Display Type	T – TFT
3	Display Size	070 – 7", 101 – 10.1", 121 – 12.1", 156 – 15.6"
4	Model Series	S – “Core” Standard Brightness IPS, H – “Pro” High Brightness IPS, L – “Lite” IPS
5	Resolution	M – 800x480, S – 1024x600 (WSVGA), W – 1280x800 (WXGA), X – 1024x768 (XGA), F – 1920x1080 (FHD)
6	Interface	L – LVDS, M – MIPI DSI, R – RGB, D – eDP, H – HDMI and USB-C
7	Frame	F – With Mounting Metal Frame, N – Without Mounting Metal Frame
8	Touch Panel	N – Without Touch Panel, C – With Projected Capacitive Touch Panel
9	Cover Glass Specification	N – Without Cover Glass, E – Rectangular Glass with Optical Bonding, U – Rounded Glass with Optical Bonding
10	Version	00 – base series, 10 – improved series

2. Mechanical Drawing

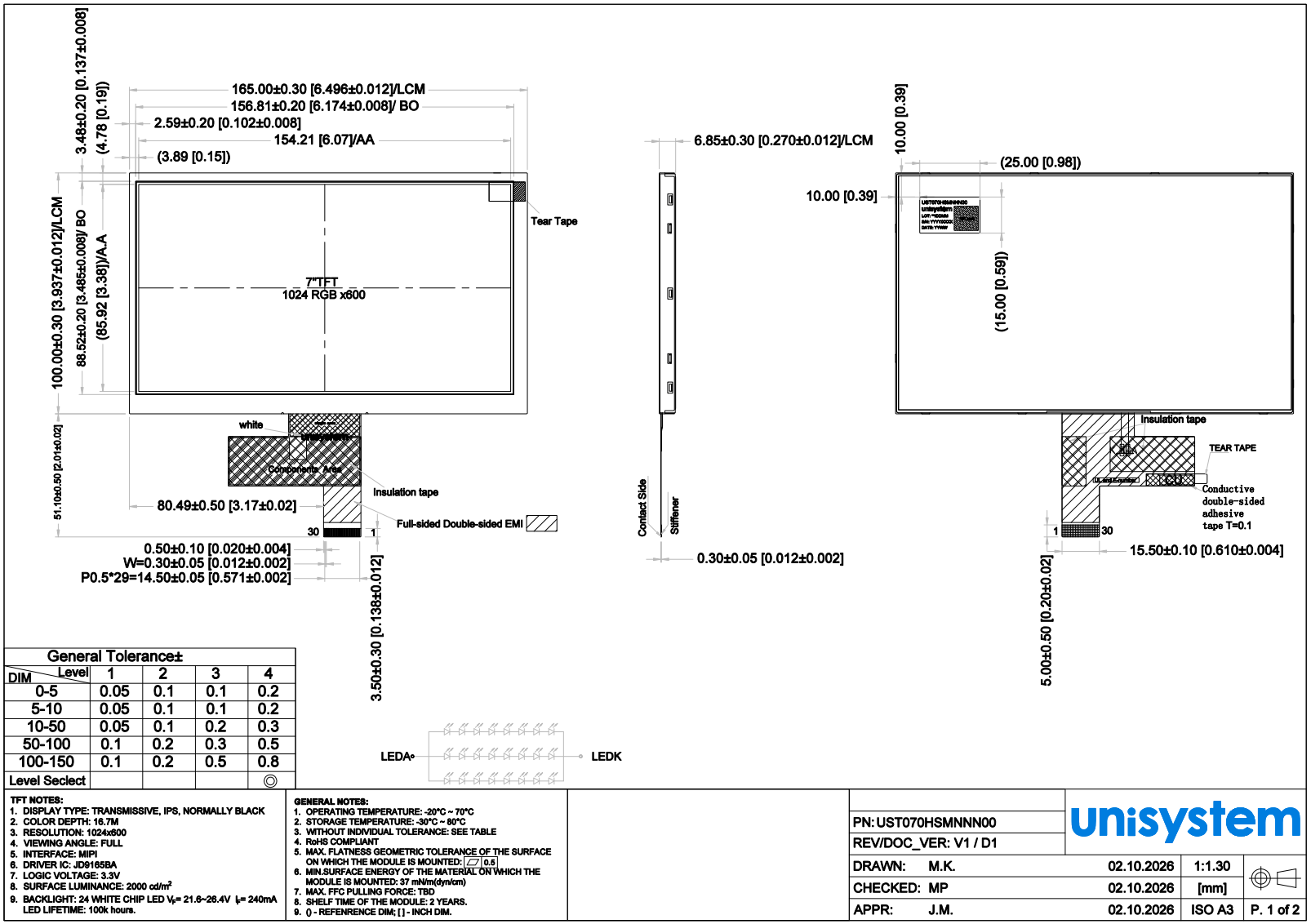

General Tolerance±				
DIM \ Level	1	2	3	4
0-5	0.05	0.1	0.1	0.2
5-10	0.05	0.1	0.1	0.2
10-50	0.05	0.1	0.2	0.3
50-100	0.1	0.2	0.3	0.5
100-150	0.1	0.2	0.5	0.8
Level Seclect				◎

TFT NOTES:
1. DISPLAY TYPE: TRANSMISSIVE, IPS, NORMALLY BLACK
2. COLOR DEPTH: 16.7M
3. RESOLUTION: 1024x600
4. VIEWING ANGLE: FULL
5. INTERFACE: MIPI
6. DRIVER IC: JD9165BA
7. LOGIC VOLTAGE: 3.3V
8. SURFACE LUMINANCE: 2000 cd/m²
9. BACKLIGHT: 24 WHITE CHIP LED V_F= 21.6~26.4V I_F= 240mA LED LIFETIME: 100k hours.

GENERAL NOTES:
1. OPERATING TEMPERATURE: -20°C ~ 70°C
2. STORAGE TEMPERATURE: -30°C ~ 80°C
3. WITHOUT INDIVIDUAL TOLERANCE: SEE TABLE
4. RoHS COMPLIANT
5. MAX. FLATNESS GEOMETRIC TOLERANCE OF THE SURFACE ON WHICH THE MODULE IS MOUNTED: ▱ 0.5
6. MIN.SURFACE ENERGY OF THE MATERIAL ON WHICH THE MODULE IS MOUNTED: 37 mN/m(dyn/cm)
7. MAX. FFC PULLING FORCE: TBD
8. SHELF TIME OF THE MODULE: 2 YEARS.
9. () - REFENRENCE DIM; [ ] - INCH DIM.

PN: UST070HSMNNN00			unisystem	
REV/DOC_VER: V1 / D1				
DRAWN:	M.K.	02.10.2026	1:1.30	
CHECKED:	MP	02.10.2026	[mm]	
APPR:	J.M.	02.10.2026	ISO A3	P. 1 of 2

3. Absolute Maximum Ratings

Item	Symbol	Min.	Max.	Unit
Power supply voltage	V_{DD}	-0.3	3.96	V
Storage temperature	T_{STG}	-30	+80	°C
Operating temperature	T_{OP}	-20	+70	°C

VSS = 0V, Ta = 25°C

Note 1: If Ta is below 50°C, the maximum humidity is 90%RH; if Ta is over 50°C, the absolute humidity shall not exceed that of 60%RH at 50°C.

Note 2: The response time will be extremely slow when the operating temperature is around -10°C or below, and the background will become darker during high-temperature operation.

4. DC Characteristics

Item	Symbol	Min.	Typ.	Max.	Unit
Supply Voltage	V_{DD}	2.8	3.3	3.6	V
Logic-High Input Voltage	V_{ih}	0.8xV_{DD}	-	V_{DD}	V
Logic-Low Input Voltage	V_{il}	GND	-	0.2xV_{DD}	V
Logic-High Output Voltage	V_{oh}	0.9xV_{DD}	-	V_{DD}	V
Logic-Low Output Voltage	V_{ol}	GND	-	0.1xV_{DD}	V
Current Consumption (All white)	I_{DD}	-	136	-	mA

5. Backlight Characteristics

Item	Symbol	Condition	Min.	Typ.	Max.	Unit
Forward Voltage	V_F	Ta = 25°C, I_F = 80mA / LED	21.6	24	26.4	V
Forward Current	I_F	Ta = 25°C, I_F = 80mA / LED	-	240	-	mA
Power Dissipation	P_D	-	-	5760	-	mW
Uniformity	Avg	-	-	80	-	%
LED working life (25°C)	-	-	-	100,000	-	Hrs
Drive method	Constant current					
LED Configuration	24 White LEDs (8 LEDs in one string and 3 groups in parallel)					

Note 1: LED lifetime is defined as the time until the brightness drops to 50% of its initial value.
The test is conducted under ambient air flow, at Ta = 25 ± 2°C, 60%RH ± 5%, I_F = 80mA / LED.

6. Optical Characteristics

6.1 Optical Specifications

Ta = 25°C, V_{DD} = 3.3V

	Item		Symbol	Condition	Specification			Unit
					Min.	Typ.	Max.	
Backlight On (Transmissive Mode)	Luminance on TFT (I_F = 80mA / LED)		L_v		-	2000	-	cd / m^2
	Contrast ratio (See 6.3)		CR		700	1000	-	
	Response time (See 6.2)		$T_R + T_F$		-	30	35	ms
	Chromaticity Transmissive (See 6.5)	Red	X_R		0.576	0.626	0.676	
			Y_R		0.290	0.340	0.390	
		Green	X_G		0.275	0.325	0.375	
			Y_G		0.517	0.567	0.617	
		Blue	X_B		0.098	0.148	0.198	
			Y_B		0.034	0.084	0.134	
		White	X_W		0.242	0.292	0.342	
			Y_W		0.291	0.341	0.391	
	Viewing Angle (See 6.4)	Horizontal	θ_{X+}	Center CR ≥ 10	70	80	-	Deg.
			θ_{X-}		70	80	-	
		Vertical	ϕ_{Y+}		70	80	-	
			ϕ_{Y-}		70	80	-	
	NTSC Ratio (Gamut)				45	50	-	%

6.2 Definition of Response Time

6.2.1 Normally Black Type (Negative)

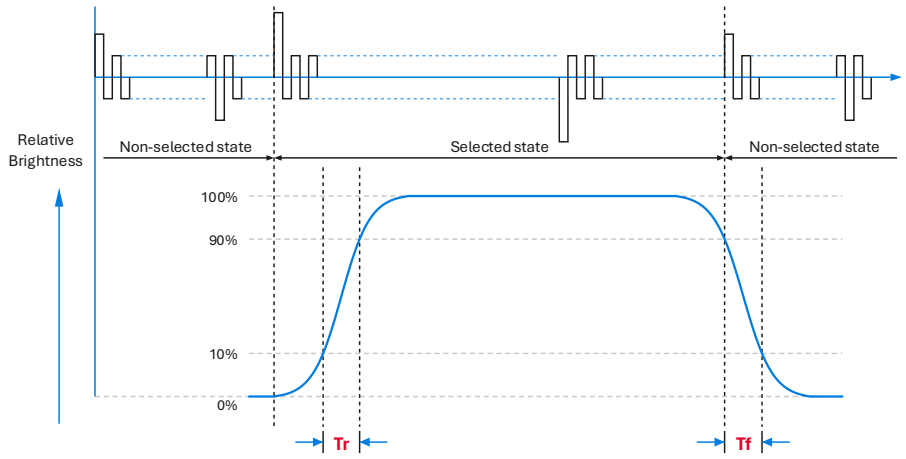

Tr is the time it takes to change from non-selected state with relative luminance 10% to selected state with relative luminance 90%.

Tf is the time it takes to change from selected state with relative luminance 90% to non-selected state with relative luminance 10%.

Note: Measuring machine: LCD-5100

6.2.2 Normally White Type (Positive)

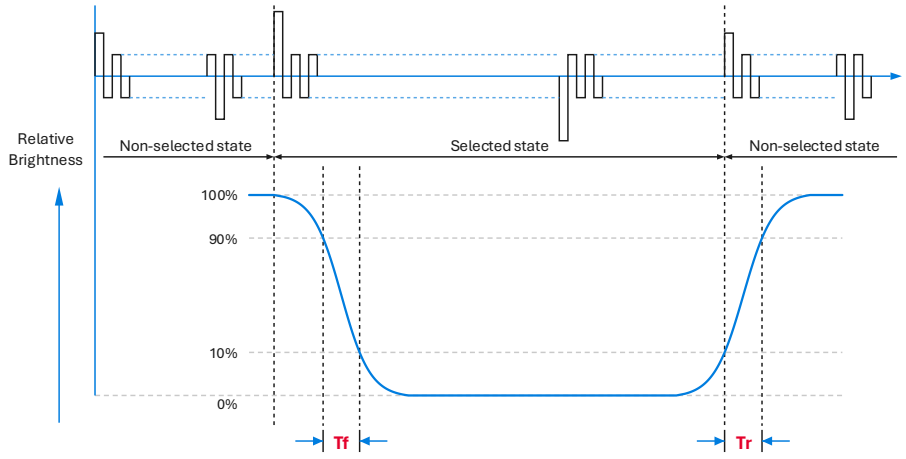

Tr is the time it takes to change from non-selected state with relative luminance 90% to selected state with relative luminance 10%.

Tf is the time it takes to change from selected state with relative luminance 10% to non-selected state with relative luminance 90%.

Note: Measuring machine: LCD-5100 or equivalent

6.3 Definition of Contrast Ratio

Contrast is measured perpendicularly to the display surface in transmissive mode.

The measurement condition is:

Measuring Equipment	Eldim or equivalent
Measuring Point Diameter	3mm / 1mm
Measuring Point Location	Active Area center point
Test pattern	A: All pixels white
	B: All pixels black
Contrast setting	Maximum

Definition: CR (Contrast) = Luminance of White Pixel / Luminance of Black Pixel

6.4 Definition of Viewing Angles

Measuring machine: LCD-5100 or equivalent

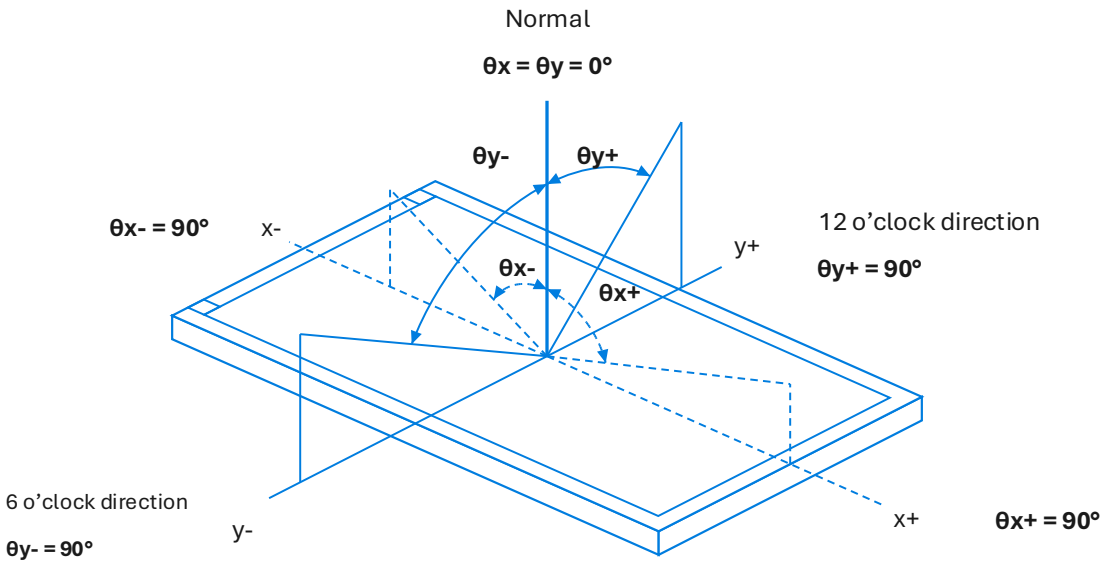

6.5 Definition of Color Appearance

R, G, B and W are defined by (x, y) coordinates on the CIE chromaticity diagram.

NTSC = area of RGB triangle / area of NTSC triangle x 100%

Measuring picture: Red, Green, Blue and White (Measuring machine: BM-7)

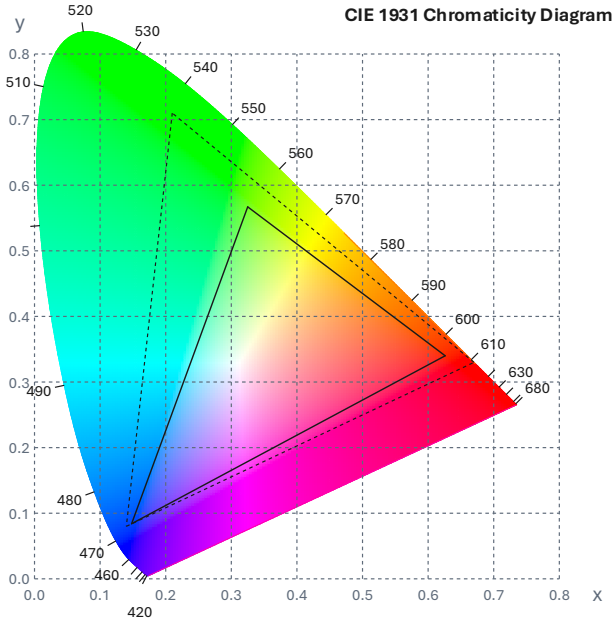

6.6 Definition of Surface Luminance, Uniformity and Transmittance

Using the transmissive mode measurement approach, measure the white screen luminance of the display panel and backlight.

Surface Luminance: L_V = average (L_{P1}:L_{P9})

Uniformity = Minimum (L_{P1}:L_{P9}) / Maximum (L_{P1}:L_{P9}) × 100%

Transmittance = L_V on LCD / L_V on Backlight × 100%

Note: Measuring machine: BM-7

Note: Test 3 brightness points below 3.5 inches (point 2 / 5 / 8), test 5 brightness points between 3.5–7 inches (point 1 / 3 / 5 / 7 / 9), and test 9 brightness points above 7 inches (point 1 to 9).

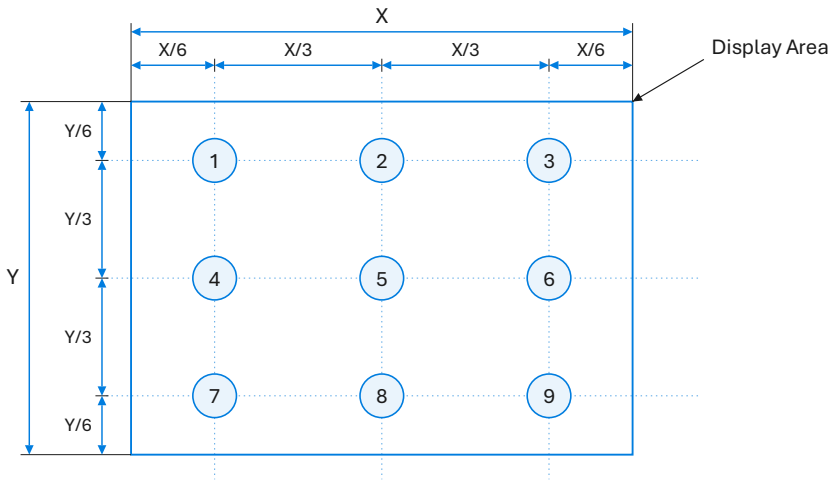

7. Block Diagram and Power Supply

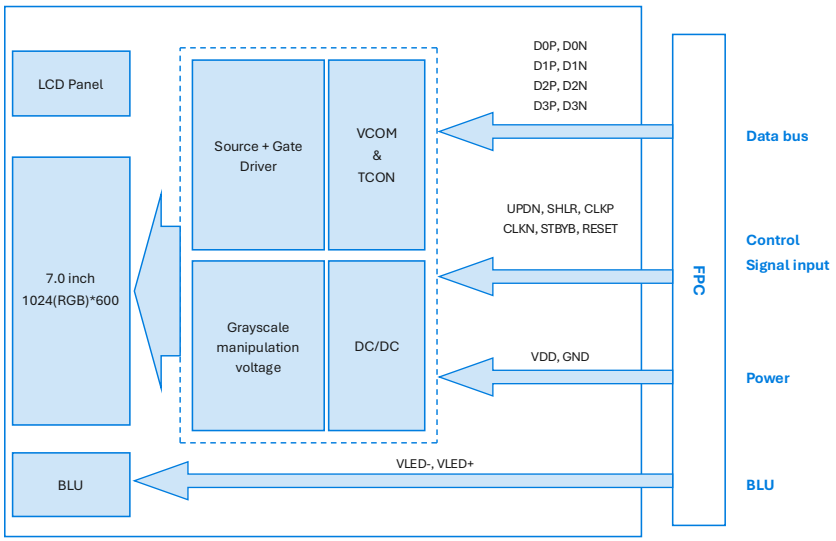

8. Interface Pins Definition

No.	Symbol	Function
1-2	VLED+	LED Anode.
3-4	NC	No connection
5	UPDN	Vertical inversion [1)]
6	SHLR	Horizontal inversion [2)]
7-8	VLED-	LED Cathode.
9	NC	No connection
10	GND	Ground
11	D3P	MIPI data Input positive-end
12	D3N	MIPI data Input negative-end
13	GND	Ground
14	D2P	MIPI data Input positive-end
15	D2N	MIPI data Input negative-end
16	GND	Ground
17	CLKP	MIPI clock Input positive-end
18	CLKN	MIPI clock Input negative-end
19	GND	Ground
20	D1P	MIPI data Input positive-end
21	D1N	MIPI data Input negative-end
22	GND	Ground
23	D0P	MIPI data Input positive-end
24	D0N	MIPI data Input negative-end
25	GND	Ground
26	STBYB	Dummy – connect to V_{DD}
27	RESET	Reset signal, active low
28-29	V_{DD}	Power supply
30	NC	No connection

Note

1) Vertical inversion (Default pull Low)

UPDN	Function
1	Bottom → Top
0	Top → Bottom

2) Horizontal inversion (Default pull Low)

SHLR	Function
1	Right → Left
0	Left → Right

9. Timing Characteristics

9.1 MIPI Input Timing Table

MIPI Input Timing	Symbol	1024RGBX600			Unit
		Min.	Typ.	Max.	
MIPI 24-bit RGB @ 2 lane Operating Frequency	-	400	616	750	Mbps
MIPI 24-bit RGB @ 4 lane Operating Frequency	-	200	308	500	Mbps
Frame Rate @ 2 lane	-	48	60	-	Hz
Frame Rate @ 4 lane	-	48	60	-	Hz
Horizontal Total	t_{ht}	1114	1344	1400	DCLK
Hsync Pulse width	t_{hs}	1	24	HBP-1	DCLK
Horizontal Back Porch	t_{hb}	60	160	160	DCLK
Horizontal Valid Data	t_{hd}	1024			DCLK
Horizontal Front Porch	t_{hfp}	30	160	216	DCLK
Vertical Total	t_{vt}	620	635	800	THT
Vsync Pulse width	t_{vs}	1	2	VBP-1	THT
Vertical Back Porch	t_{vb}	8	23	100	THT
Vertical Valid Data	t_{vd}	600			THT
Vertical Front Porch	t_{vfp}	12	12	100	THT

9.2 MIPI Video Input Timing

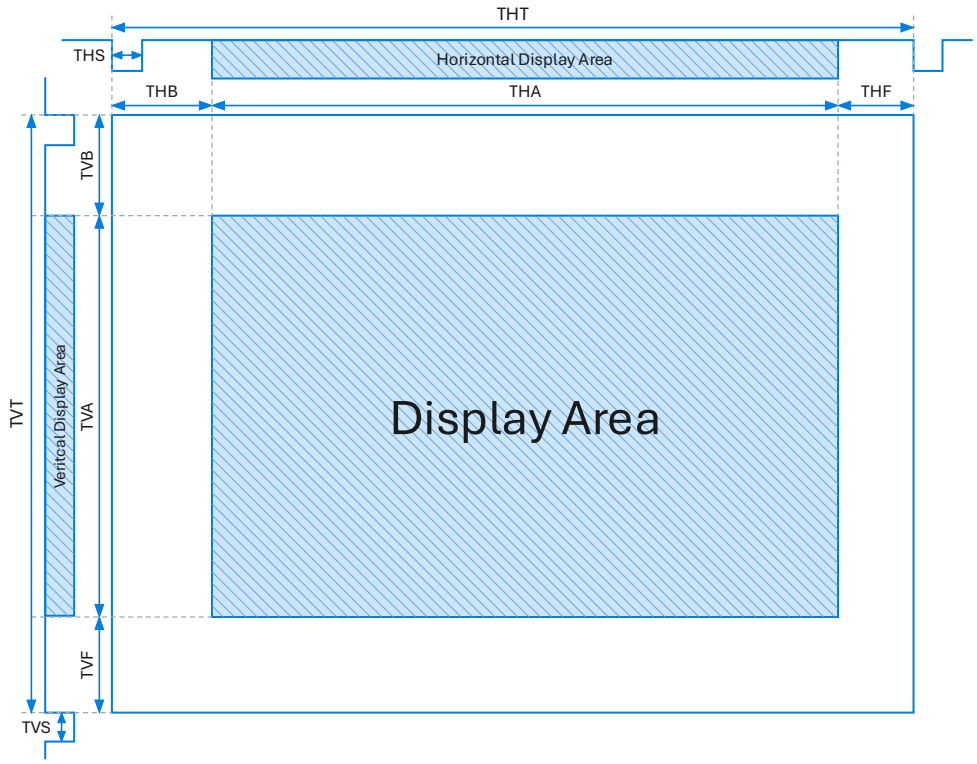

9.3 MIPI Low Power Transmitter AC Specification

Parameter		Symbol	Min.	Typ.	Max.	Units	Notes
15% ~ 85% rising time and falling time		T_{RLP} / T_{FLP}	-	-	25	ns	-
30% ~ 85% rising time and falling time		T_{REOT}	-	-	35	ns	-
Pulse width of LP exclusive-OR clock	First LP EXOR clock pulse after STOP state or Last pulse before stop state	$T_{LP-PULSE-TX}$	100	-	-	ns	-
	All other pulses		100	-	-	ns	
Period of the LP EXOR clock (LP Speed)		$T_{LP-PER-TX}$	200	-	-	ns	-
Slew Rate @ CLOAD = 0pF		$\delta V / \delta t_{SR}$	20	-	500	mV / ns	-
Slew Rate @ CLOAD = 5pF			20	-	200	mV / ns	-
Slew Rate @ CLOAD = 20pF			20	-	150	mV / ns	-
Slew Rate @ CLOAD = 70pF			20	-	100	mV / ns	-
Load Capacitance		C_{LOAD}	-	-	70	pF	-

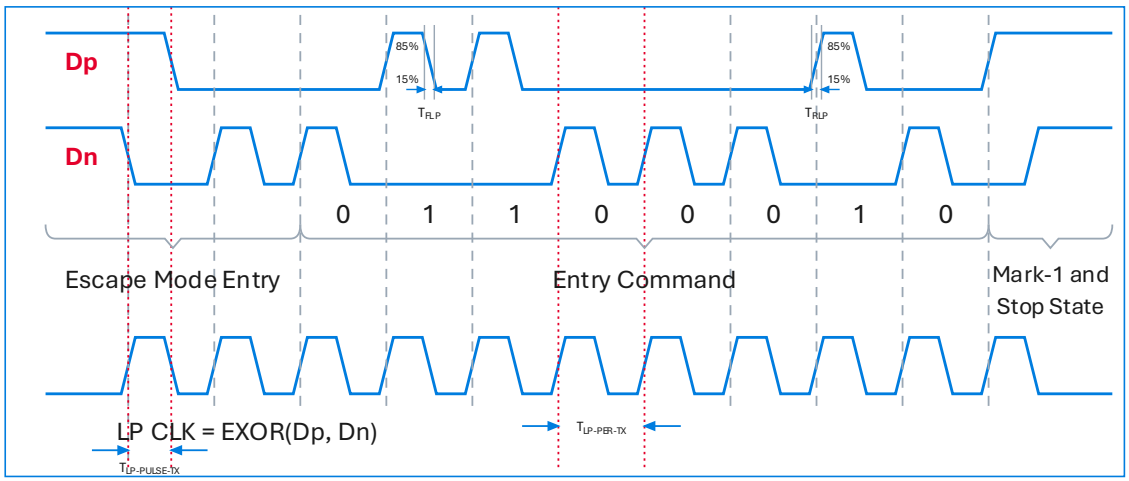

9.4 MIPI Low Power Turnaround Procedure

Turnaround Procedure Operation Timing Parameters

Parameter	Symbol	Min.	Typ.	Max.	Units
Length of any Low-Power state period	T_{LPX}	100	-	-	ns
Time-out before new TX side start driving	$T_{TA-Sure}$	T_{LPX}	-	$2T_{LPX}$	ns
Time to drive LP-00 by new TX	T_{TA-GET}	-	$5T_{LPX}$	-	ns
Time to drive LP-00 after Turnaround Request	T_{TA-GO}	-	$4T_{LPX}$	-	ns

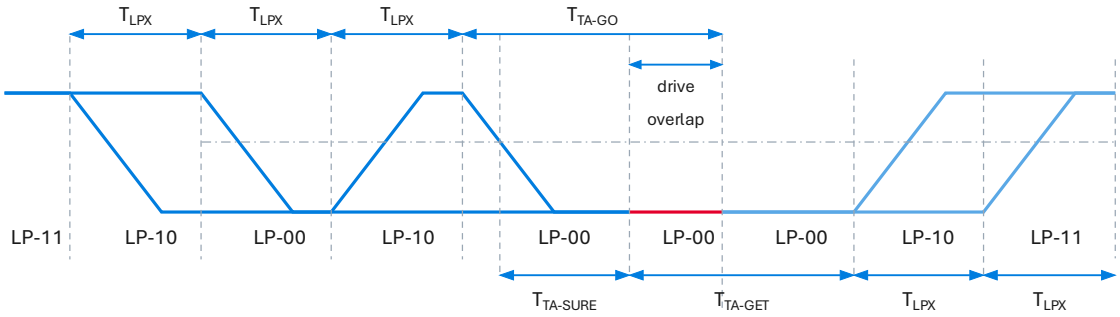

9.5 MIPI High Speed AC Characteristics

Parameter	Description	Spec.			Unit
		Min.	Typ.	Max.	
T_{REOT}	30%-85% rise time and fall time	-	-	35	ns
$T_{CLK-MISS}$	Timeout for receiver to detect absence of Clock transitions and disable the Clock Lane HS-RX.	-	-	60	ns
$T_{CLK-POST}$*1	Time that the transmitter continues to send HS clock after the last associated Data Lane has transitioned to LP Mode. Interval is defined as the period from the end of $T_{HS-TRAIL}$ to the beginning of $T_{CLK-TRAIL}$.	60 ns + 52*UI	-		ns
$T_{CLK-PRE}$	Time that the HS clock shall be driven by the transmitter prior to any associated Data Lane beginning the transition from LP to HS mode.	8	-		UI
$T_{CLK-SETTLE}$	Time interval during which the HS receiver shall ignore any Clock Lane HS transitions, starting from the beginning of $T_{CLK-PRE}$.	95	-	300	ns
$T_{CLK-TERM-EN}$	Time for the Clock Lane receiver to enable the HS line termination, starting from the time point when Dn crosses $V_{IL,MAX}$.	Time for Dn to reach VTERM-EN	-	38	ns
$T_{HS-SETTLE}$	Time interval during which the HS receiver shall ignore any Data Lane HS transitions, starting from the beginning of $T_{HSPREPARE}$.	85 ns + 6*UI	-	145 ns + 10*UI	ns
T_{EOT}	Time from start of $T_{HS-TRAIL}$ or $T_{CLK-TRAIL}$ period to start of LP-11 state	-	-	105ns + n*12*UI	-
$T_{HS-EXIT}$	Time to drive LP-11 after HS burst	100	-	-	ns
$T_{HS-PREPARE}$	Time to drive LP-00 to prepare for HS transmission	40ns + 4*UI	-	85ns + 6*UI	ns
$T_{HS-PREPARE}$ + $T_{HS-ZERO}$	$T_{HS-PREPARE}$ + Time to drive HS-0 before the Sync sequence	145ns + 10*UI	-	-	ns
$T_{HS-SKIP}$	Time-out at RX to ignore transition period of EoT	40	-	55ns + 4*UI	ns
$T_{HS-TRAIL}$	Time to drive flipped differential state after last payload data bit of an HS transmission burst	60 ns + 4*UI	-	-	ns
T_{LPX}	Length of any Low-Power state period	100	-	-	ns
Ratio T_{LPX}	Ratio of $T_{LPX\ (MASTER)}$ / $T_{LPS\ (SLAVE)}$ between Master and Slave side	2 / 3	-	3 / 2	-
T_{TA-GET}	Time to drive LP-00 by new TX	$5*T_{LPX}$			ns
T_{TA-GO}	Time to drive LP-00 after Turnaround Request	$4*T_{LPX}$			ns
$T_{TA-SURE}$	Time-out before new TX side starts driving	T_{LPX}	-	$2*T_{LPX}$	ns

Note: (1) For $T_{CLK-POST}$ example:

$T_{CLK-POST}$ min value = 82UI when MIPI max frequency per lane = 0.5Gbps.

$T_{CLK-POST}$ min value = 112UI when MIPI max frequency per lane = 1Gbps

(2) For T_{EOT}:

When n = 1 for Forward-direction HS mode and n = 4 for Reverse-direction HS mode.

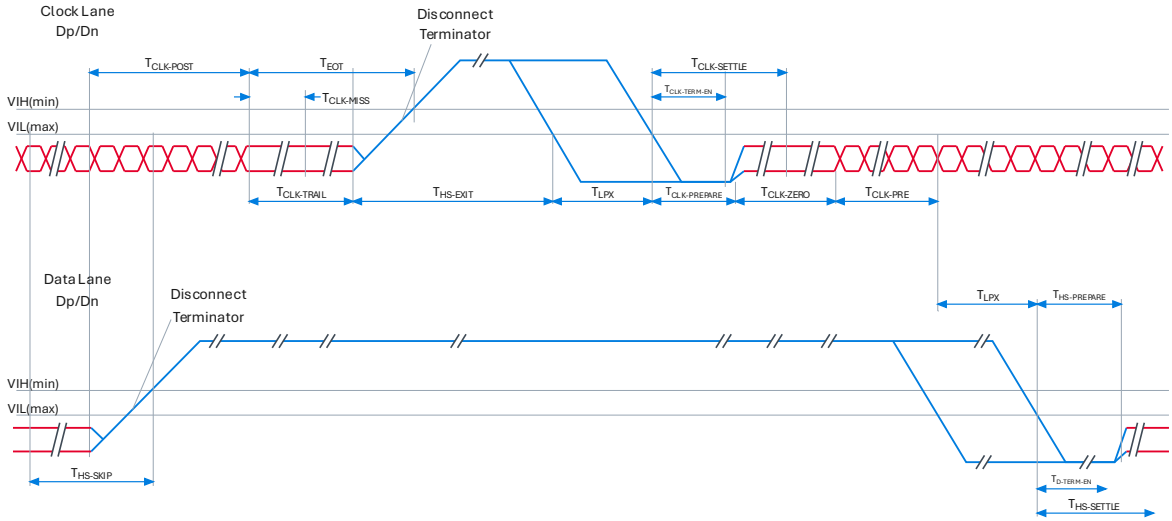

Switching the clock lane between clock transmission and low-power mode

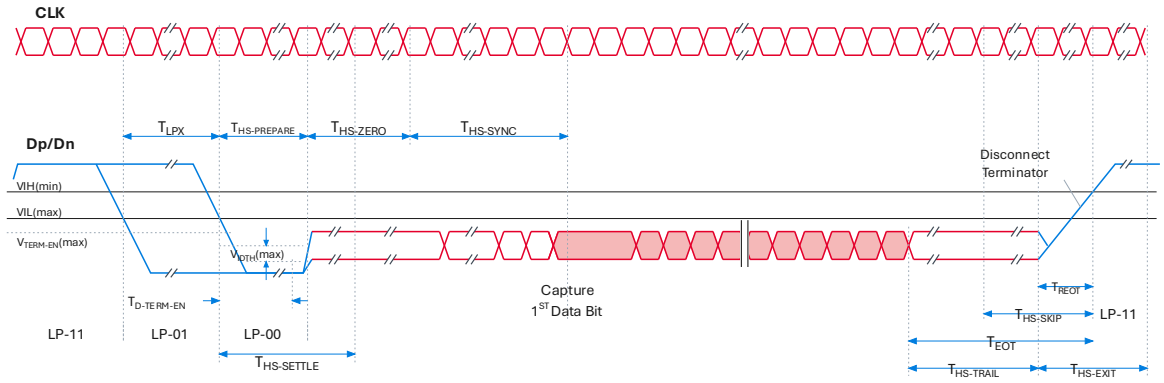

Timing of high-speed data transmission in bursts

9.6 MIPI Data-Clock Timing Specification

Parameter	Symbol	Min.	Typ.	Max.	Units
Data to clock setup time	$T_{SETUP[RX]}$	0.15(1)	-	-	UI_{INST}
Data to clock hold time	$T_{HOLD[RX]}$	0.15(1)	-	-	UI_{INST}

Note: (1) Total setup and hold window for receiver of 0.3* UI_{INST}.

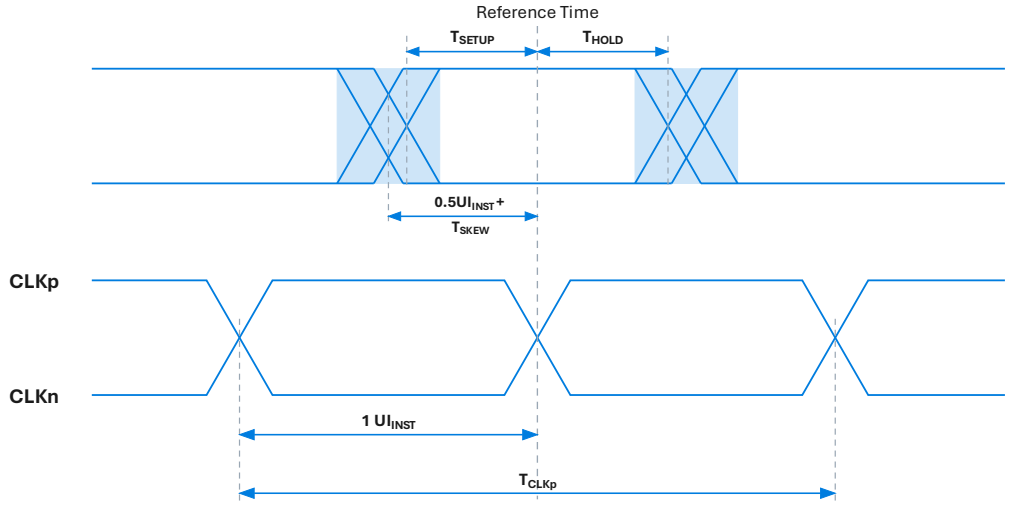

10. Quality Assurance

10.1 Purpose

This Quality Assurance standard ensures the quality of LCD module products supplied to the customer.

10.2 Standard for Quality Test

10.2.1 Sampling Plan:

GB/T2828.1-2012

Single sampling, general inspection level II

10.2.2 Sampling Criteria:

Visual inspection: AQL 1.5

Electrical functional: AQL 0.65.

10.2.3 Reliability Test:

For detailed requirements refer to Section 11 Reliability Specification.

10.3 Agreement Items

The following situations shall be negotiated with the customer:

10.3.1 Any discrepancy in the standard of quality assurance.

10.3.2 Additional requirements to be added to the product specification.

10.3.3 Any other special problem.

10.4 Standard of the Product Visual Inspection

10.4.1 Appearance inspection:

10.4.1.1 The inspection must be carried out under an illumination of about 1000 – 1500 lx, and the viewing distance must be 30 cm ± 2 cm.

10.4.1.2 The viewing angle should be 45° from the vertical line without reflected light, or follow the customer's viewing angle specifications.

10.4.1.3 Definition of area: A Zone: Active Area, B Zone: Viewing Area.

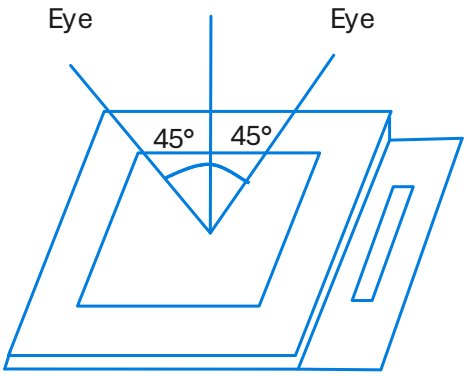

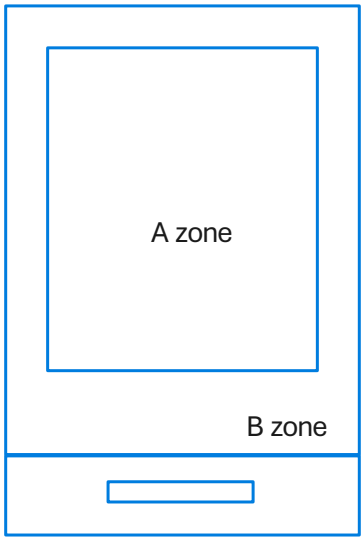

10.4.2 Basic principle:

10.4.2.1 A set of samples to indicate the limit of acceptable quality level must be discussed by both us and the customer when a dispute occurs.

10.4.2.2 New items must be added when necessary.

10.5 Inspection Specification

<table>
<tr><th>No.</th><th>Item</th><th>Criteria (Unit: mm)</th></tr>
<tr><td>01</td><td>Black / White spot
Foreign material (Round type)
Pinholes Stain
Particles inside cell.
(Minor defect)</td><td>
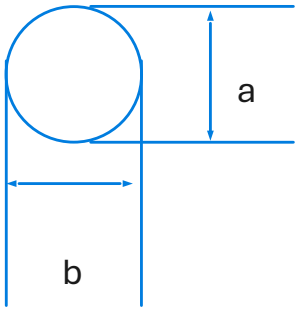

<table>
<tr><th>Size \ Area</th><th>Acc. Qty</th></tr>
<tr><td>ϕ ≤ 0.20</td><td>Ignore</td></tr>
<tr><td>0.20 < ϕ ≤ 0.50</td><td>N ≤ 3</td></tr>
<tr><td>0.50 < ϕ</td><td>0</td></tr>
</table>
ϕ = (a + b) / 2
The distance between 2 defects should be more than 5 mm.
</td></tr>
</table>

<table>
<tr><th>No.</th><th>Item</th><th>Criteria (Unit: mm)</th></tr>
<tr><td>02</td><td>Electrical Defect
(Major defect)</td><td>
<table>
<tr><td rowspan="2">Bright dot</td><td>Display Area</td><td>Total</td><td rowspan="3">Note 1</td></tr>
<tr><td>N ≤ 2</td><td>N ≤ 2</td></tr>
<tr><td>Dark dot</td><td>N ≤ 4</td><td>N ≤ 4</td></tr>
<tr><td>Total dot</td><td>N ≤ 4</td><td>N ≤ 4</td></tr>
<tr><td>Mura</td><td colspan="2">Not visible through 3% ND filters.</td><td>Note 2</td></tr>
</table>

Remark:
1. A bright dot caused by a scratch or a foreign object is judged according to item 01.
</td></tr>
<tr><td>03</td><td>Black and White line
Scratch
Foreign material (Line type)
(Minor defect)</td><td>
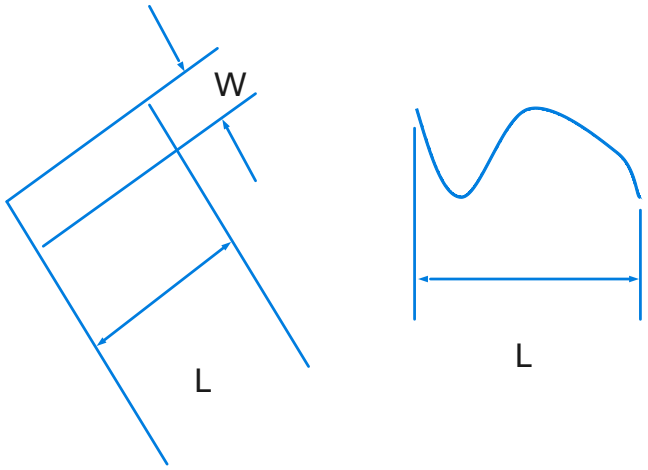

<table>
<tr><th>Length</th><th>Width</th><th>Acc. Qty</th></tr>
<tr><td>/</td><td>W ≤ 0.1</td><td>Ignore</td></tr>
<tr><td>L ≤ 2.5</td><td>0.1 < W ≤ 0.2</td><td>3</td></tr>
<tr><td>L > 2.5</td><td>0.2 < W</td><td>0</td></tr>
<tr><td colspan="2">Total</td><td>3</td></tr>
</table>

The distance between 2 defects should be more than 3 mm. Scratches not viewable through the back of the display are acceptable.
</td></tr>
<tr><td>04</td><td>Glass Crack
(Major defect)</td><td>
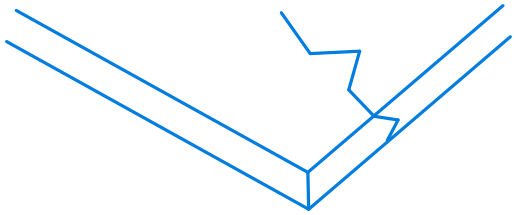

Cracks of any type are not allowed, as a crack may enlarge.
</td></tr>
</table>

<table>
<tr><th>No.</th><th>Item</th><th>Criteria (Unit: mm)</th></tr>
<tr><td>05</td><td>Glass Chipping Pad Area:
(Minor defect)</td><td>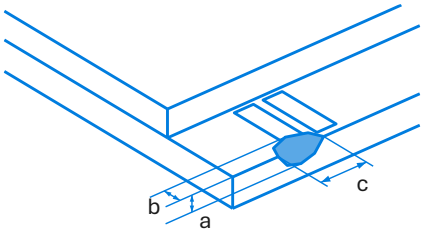

<table>
<tr><th>Length and Width</th><th>Acc. Qty</th></tr>
<tr><td>c > 3.0, b < 1.0</td><td>1</td></tr>
<tr><td>c < 3.0, b < 1.0</td><td>3</td></tr>
<tr><td colspan="2">a < Glass Thickness</td></tr>
</table></td></tr>
<tr><td>06</td><td>Glass Chipping Rear of Pad Area:
(Minor defect)</td><td>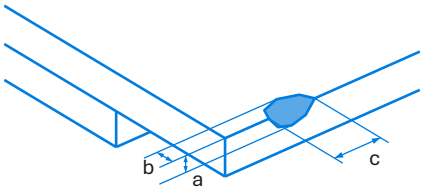

<table>
<tr><th>Length and Width</th><th>Acc. Qty</th></tr>
<tr><td>c > 3.0, b < 1.0</td><td>1</td></tr>
<tr><td>c < 3.0, b < 1.0</td><td>2</td></tr>
<tr><td>c < 3.0, b < 0.5</td><td>4</td></tr>
<tr><td colspan="2">a < Glass Thickness</td></tr>
</table></td></tr>
<tr><td>07</td><td>Glass Chipping Except Pad Area:
(Minor defect)</td><td>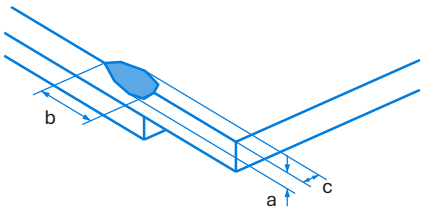

<table>
<tr><th>Length and Width</th><th>Acc. Qty</th></tr>
<tr><td>c > 3.0, b < 1.0</td><td>1</td></tr>
<tr><td>c < 3.0, b < 1.0</td><td>2</td></tr>
<tr><td>c < 3.0, b < 0.5</td><td>4</td></tr>
<tr><td colspan="2">a < Glass Thickness</td></tr>
</table></td></tr>
<tr><td>08</td><td>Glass Corner Chipping:
(Minor defect)</td><td>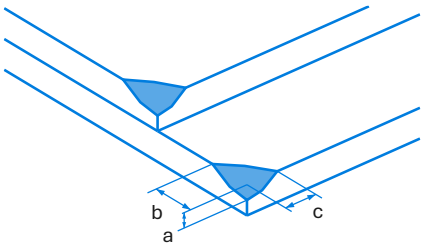

<table>
<tr><th>Length and Width</th><th>Acc. Qty</th></tr>
<tr><td>c < 3.0, b < 3.0</td><td>Ignore</td></tr>
<tr><td colspan="2">a < Glass Thickness</td></tr>
</table></td></tr>
</table>

<table>
<tr><th>No.</th><th>Item</th><th>Criteria (Unit: mm)</th></tr>
<tr><td>09</td><td>Glass Burr:
(Minor defect)</td><td>
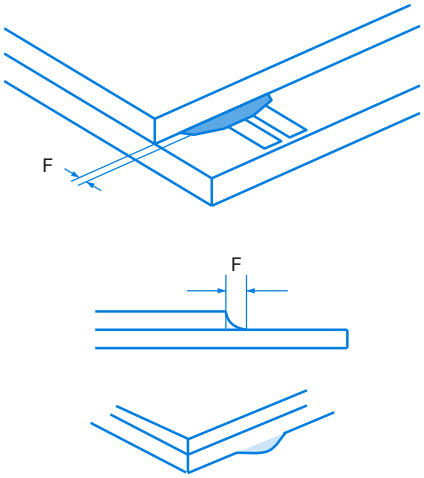

<table>
<tr><th>Length</th><th>Acc. Qty</th></tr>
<tr><td>F < 1.0</td><td>Ignore</td></tr>
</table>
Glass burr must not affect assembly and module dimensions.
</td></tr>
<tr><td>10</td><td>FPC Defect:
(Minor defect)</td><td>
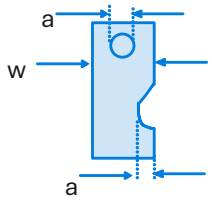

10.1 Dent, pinhole width a < w / 3. (w: circuitry width.)
10.2 Open circuit is unacceptable.
10.3 No oxidation, contamination and distortion.
</td></tr>
<tr><td>11</td><td>Bubble on Polarizer
(Minor defect)</td><td>
<table>
<tr><th>Diameter</th><th>Acc. Qty</th></tr>
<tr><td>ϕ ≤ 0.30</td><td>Ignore</td></tr>
<tr><td>0.30 < ϕ ≤ 0.50</td><td>N ≤ 2</td></tr>
<tr><td>0.50 < ϕ</td><td>N = 0</td></tr>
</table>
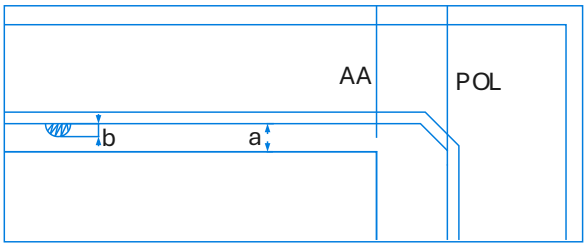

b < 1 / 2a
Note: In high-temperature and high-humidity experiments, bubbles do not disperse.
</td></tr>
</table>

<table>
<tr><th>No.</th><th>Item</th><th>Criteria (Unit: mm)</th></tr>
<tr><td>12</td><td>Dent on Polarizer
(Minor defect)</td><td>
<table>
<tr><th>Diameter</th><th>Acc. Qty</th></tr>
<tr><td>ϕ ≤ 0.25</td><td>Ignore</td></tr>
<tr><td>0.25 < ϕ ≤ 0.50</td><td>N ≤ 4</td></tr>
<tr><td>0.50 < ϕ</td><td>None</td></tr>
</table>
</td></tr>
<tr><td>13</td><td>Bezel</td><td>13.1 No rust or distortion on the bezel.
13.2 No visible fingerprints, stains or other contamination.</td></tr>
<tr><td>14</td><td>PCB</td><td>14.1 No distortion or contamination on PCB terminals.
14.2 All components on the PCB must be the same as documented on the BOM / component layout.
14.3 Follow IPC-A-600F.</td></tr>
<tr><td>15</td><td>Soldering</td><td>Follow the IPC-A-610C standard.</td></tr>
<tr><td>16</td><td>Electrical Defect
(Major defect)</td><td>The following defects must be rejected:
16.1 Missing vertical / horizontal line.
16.2 Abnormal Display.
16.3 No function or no display.
16.4 Current exceeds product specifications.
16.5 LCD viewing angle defect.
16.6 No Backlight.
16.7 Dark Backlight.</td></tr>
</table>

Remark: A broken LCD panel shall be rejected. Defects outside the LCD viewing area are acceptable.

10.6 Classification of Defects

10.6.1 Visual defects (except missing / wrong label) are treated as minor defects, and electrical defects as major defects.

10.6.2 Two minor defects are equal to one major defect in lot sampling inspection.

10.7 Identification / Marking Criteria

Any unit with illegible, wrong, double or missing marking / label shall be rejected.

10.8 Packing

10.8.1 There should be no damage to the outer carton box; each packaging box should have one identical label.

10.8.2 Modules inside the package box should have a compliance mark.

10.8.3 All direct package materials shall offer ESD protection.

Note 1: Bright dot is defined as a dot whose defective area is larger than 50% of one sub-pixel area.

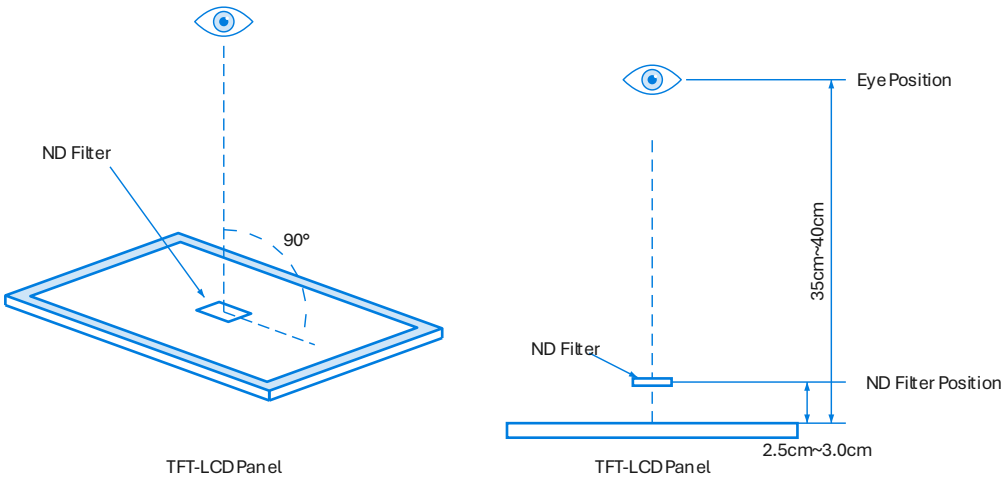

Bright dot: a dot-size bright defect on a black display pattern. It can be recognized through a 2% transmittance filter at an eye-to-panel distance of 350 mm ± 50 mm.

Dark dot: a cyan, magenta or yellow dot-size defect on a white display pattern. It can be recognized through a 3% transmittance filter at an eye-to-panel distance of 350 mm ± 50 mm.

Note 2: Mura — areas of the display that appear darker / brighter than the surrounding background.

11. Reliability Specification

No.	Item	Condition	Quantity	Criteria
1	High Temperature Operating	70°C, 96Hrs	2	GB/T2423.2 -2008
2	Low Temperature Operating	-20°C, 96Hrs	2	GB/T2423.1 -2008
3	High Humidity Storage	50°C, 90%RH, 96Hrs	2	GB/T2423.3 -2016
4	High Temperature Storage	80°C, 96Hrs	2	GB/T2423.2 -2008
5	Low Temperature Storage	-30°C, 96Hrs	2	GB/T2423.1 -2008
6	Thermal Cycling Test Storage	-20°C, 60 min ~ 70°C, 60 min, 20 cycles.	2	GB/T2423.22 -2012
7	Packing vibration	Frequency range: 10Hz ~ 50Hz Acceleration of gravity: 5G X, Y, Z: 30 min for each direction.	-	GB/T5170.14 -2009
8	Electrostatic Discharge	Air: ±4kV, 150pF / 330Ω, 5 times	2	GB/T17626.2 -2018
		Contact: ±2kV, 150pF / 330Ω, 5 times		
9	Drop Test (Packaged)	Height: 80 cm, 1 corner, 3 edges, 6 surfaces.	-	GB/T2423.7 -2018

Note 1: No cosmetic defects and no loss of operational function are allowed.

Note 2: The total current consumption should be below twice the initial value.

12. Precautions

12.1 Safety

12.1.1 The liquid crystal in the LCD is poisonous. Do not put it in your mouth. If the liquid crystal touches your skin or clothes, wash it off immediately using soap and water.

12.1.2 Since the liquid crystal cells are made of glass, do not subject them to strong impacts. Handle with care.

12.2 Handling

12.2.1 Store and use within ratings in order to keep performance and prevent damage.

12.2.2 Do not wipe the polarizer with a dry cloth, as it might cause scratches. If the surface of the LCD needs to be cleaned, wipe it swiftly with cotton or another soft cloth soaked with IPA or petroleum benzine; do not use other chemicals.

12.3 Storage

12.3.1 Do not store the LCD module beyond the specified temperature ranges.

12.3.2 Strong light exposure causes degradation of the polarizer and color filter.

12.4 Operation

12.4.1 Response time will increase at lower temperatures.

12.4.2 The display may change color at different temperatures.

12.4.3 Mechanical disturbance during operation, such as pressing on the display area, may cause temporary display non-uniformity.

12.4.4 Do not connect or disconnect the LCM to or from the system when power is on.

12.4.5 Never use the LCM under abnormal conditions of high temperature and high humidity.

12.4.6 The module has high-frequency circuits. Sufficient suppression of electromagnetic interference shall be provided by the system manufacturer. Grounding and shielding methods may be important to minimize the interference.

12.4.7 Do not display a fixed pattern for a long time (we recommend no longer than one hour), as it may cause image sticking due to the TFT structure.

12.5 Static Electricity

12.5.1 This unit contains CMOS LSIs, so care must be taken to avoid electrostatic charge, e.g. by grounding the human body.

12.5.2 The normal static prevention measures should be observed for work clothes and benches.

12.5.3 The module should be kept in anti-static bags or other containers resistant to static for storage.

13. Legal Information

CE Marking

CE marking is obligatory only for complete end products. Unisystem display modules are semifinished goods designed to be integrated into finished devices and, therefore, are not CE marked.

Warranty

Unisystem grants a warranty for the proper operation of the goods for a period of 24 months from the date of delivery. If, as a result of a warranty claim, the customer receives a defect-free item as a replacement, the warranty period shall start anew from the moment the replacement is received.

Right to Change Specifications

Unisystem reserves the right to make changes to the product specifications, dimensions, and materials without prior notice in order to improve reliability, function, or design. It is the buyer's responsibility to verify that the datasheet is current before placing an order.

Intellectual Property

This document and the technical information herein are the exclusive property of Unisystem and may be subject to pending or granted patents. Reproduction or disclosure of this document without prior written permission is strictly prohibited. No intellectual property licenses are implicitly conveyed.

Limitation of Liability

Images and graphics used in this document are for illustrative purposes only. Unisystem shall not be liable to the buyer or any third party for any indirect, incidental, special, or consequential damages (including, without limitation, lost profits or business opportunities) arising from the use of its products or services.

High-Risk Applications Disclaimer

Unisystem products are not designed, intended, or authorized for use in safety-critical or high-risk applications where failure could directly result in personal injury, death, or severe environmental damage (e.g., life support machines, aerospace navigation, nuclear facilities). Using Unisystem products in such high-risk activities is entirely at the buyer's risk, and the buyer agrees to fully indemnify and hold Unisystem harmless from any damages or claims resulting from such unauthorized use.

14. Contact Information

UNISYSTEM SP. Z O.O.

Nowy Świat 36
80-299 Gdańsk
Poland

+48 58 761 54 20
office@unisystem.com

EU VAT No.:
PL5842741076