unisystem

# UST070HSRNNN00

**7.0" IPS LCD-TFT MODULE SPECIFICATION**

Passion for displays

# Key Specifications

| Parameter | Specification |
|---|---|
| LCD Type | IPS TFT / Transmissive / Normally Black |
| Size (Diagonal) | 7.0" |
| Viewing Direction | Full Viewing (All) |
| Outside Dimensions (W x H x D) | 165.00 x 100.00 x 6.85 mm |
| Active Area (W x H) | 154.21 x 85.92 mm |
| Pixel Pitch (W x H) | 0.1506 x 0.1432 mm |
| Resolution | 1024 x 600 (RGB) |
| Brightness | 2000 cd / $m^2$ (typ.) |
| Contrast Ratio | 1000:1 (typ.) |
| Color Depth | 16.7 M |
| Pixel Arrangement | RGB Stripe |
| Interface | RGB (24-bit parallel) |
| LCD Driver | JD9165BA |
| With / Without Touch | Without Touch Panel |
| Surface Treatment | Glare |
| Operating / Storage Temp. | -20°C ~ +70°C / -30°C ~ +80°C |
| Weight | TBD |

# Revision Table

| Rev. | Date | Description |
|---|---|---|
| 1.0 | 2026-10-13 | First issue |

# Contents

**1. Coding System** ..... 4
**2. Mechanical Drawing** ..... 5
**3. Absolute Maximum Ratings** ..... 6
**4. DC Characteristics** ..... 6
**5. Backlight Characteristics** ..... 6
**6. Optical Characteristics** ..... 7
6.1 Optical Specifications ..... 7
6.2 Definition of Response Time ..... 7
6.3 Definition of Contrast Ratio ..... 8
6.4 Definition of Viewing Angles ..... 9
6.5 Definition of Color Appearance ..... 9
6.6 Definition of Surface Luminance, Uniformity and Transmittance ..... 10
**7. Block Diagram and Power Supply** ..... 10
**8. Interface Pins Definition** ..... 11
**9. Timing Characteristics** ..... 13
9.1 RGB Input Timing Table ..... 13
9.2 RGB Input Timing Diagram ..... 14
9.3 RGB AC Characteristics ..... 15
**10. Quality Assurance** ..... 16
10.1 Purpose ..... 16
10.2 Standard for Quality Test ..... 16
10.3 Agreement Items ..... 16
10.4 Standard of the Product Visual Inspection ..... 16
10.5 Inspection Specification ..... 17
10.6 Classification of Defects ..... 21
10.7 Identification / Marking Criteria ..... 21
10.8 Packing ..... 21
**11. Reliability Specification** ..... 22
**12. Precautions** ..... 23
12.1 Safety ..... 23
12.2 Handling ..... 23
12.3 Storage ..... 23
12.4 Operation ..... 23
12.5 Static Electricity ..... 23
**13. Legal Information** ..... 24
**14. Contact Information** ..... 25

# 1. Coding System

| 1 | 2 | 3 | 4 | 5 | 6 | 7 | 8 | 9 | 10 |
|---|---|---|---|---|---|---|---|---|---|
| **US** | **T** | **070** | **H** | **S** | **R** | **N** | **N** | **N** | **00** |

| No. | Parameter | Options |
|---|---|---|
| 1 | Manufacturer | Unisystem |
| 2 | Display Type | T – TFT |
| 3 | Display Size | 070 – 7", 101 – 10.1", 121 – 12.1", 156 – 15.6" |
| 4 | Model Series | S – “Core” Standard Brightness IPS, H – “Pro” High Brightness IPS, L – “Lite” IPS |
| 5 | Resolution | M – 800x480, S – 1024x600 (WSVGA), W – 1280x800 (WXGA), X – 1024x768 (XGA), F – 1920x1080 (FHD) |
| 6 | Interface | L – LVDS, M – MIPI DSI, R – RGB, D – eDP, H – HDMI and USB-C |
| 7 | Frame | F – With Mounting Metal Frame, N – Without Mounting Metal Frame |
| 8 | Touch Panel | N – Without Touch Panel, C – With Projected Capacitive Touch Panel |
| 9 | Cover Glass Specification | N – Without Cover Glass, E – Rectangular Glass with Optical Bonding, U – Rounded Glass with Optical Bonding |
| 10 | Version | 00 – base series, 10 – improved series |

# 2. Mechanical Drawing

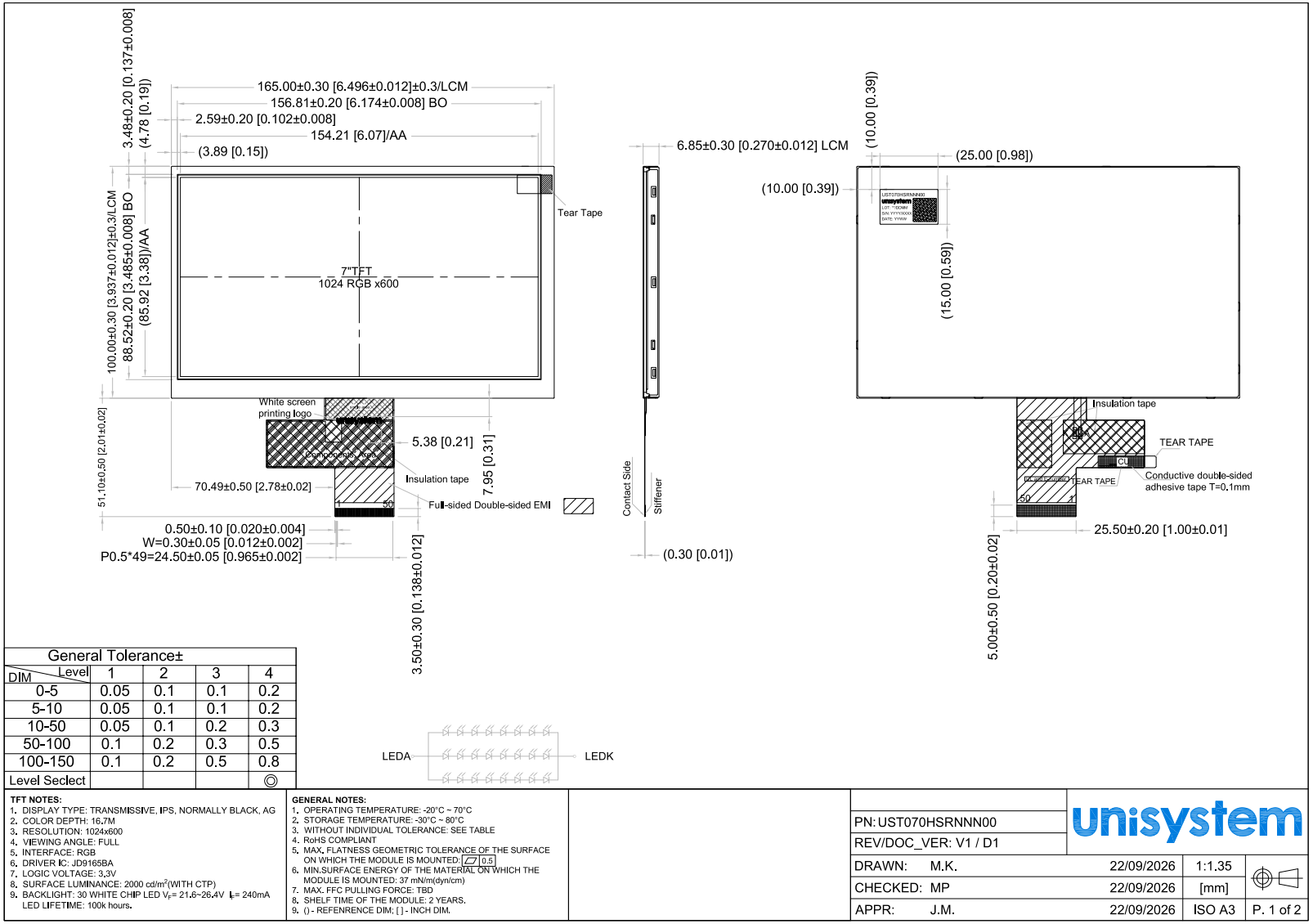


| General Tolerance± | | | | |
|---|---|---|---|---|
| DIM \ Level | 1 | 2 | 3 | 4 |
| 0-5 | 0.05 | 0.1 | 0.1 | 0.2 |
| 5-10 | 0.05 | 0.1 | 0.1 | 0.2 |
| 10-50 | 0.05 | 0.1 | 0.2 | 0.3 |
| 50-100 | 0.1 | 0.2 | 0.3 | 0.5 |
| 100-150 | 0.1 | 0.2 | 0.5 | 0.8 |
| Level Seclect | | | | ◎ |

**TFT NOTES:**
1. DISPLAY TYPE: TRANSMISSIVE, IPS, NORMALLY BLACK, AG
2. COLOR DEPTH: 16.7M
3. RESOLUTION: 1024x600
4. VIEWING ANGLE: FULL
5. INTERFACE: RGB
6. DRIVER IC: JD9165BA
7. LOGIC VOLTAGE: 3.3V
8. SURFACE LUMINANCE: 2000 cd/m²(WITH CTP)
9. BACKLIGHT: 30 WHITE CHIP LED $V_F$= 21.6~26.4V $I_F$= 240mA
   LED LIFETIME: 100k hours.

**GENERAL NOTES:**
1. OPERATING TEMPERATURE: -20°C ~ 70°C
2. STORAGE TEMPERATURE: -30°C ~ 80°C
3. WITHOUT INDIVIDUAL TOLERANCE: SEE TABLE
4. RoHS COMPLIANT
5. MAX. FLATNESS GEOMETRIC TOLERANCE OF THE SURFACE ON WHICH THE MODULE IS MOUNTED: ⏥ 0.5
6. MIN.SURFACE ENERGY OF THE MATERIAL ON WHICH THE MODULE IS MOUNTED: 37 mN/m(dyn/cm)
7. MAX. FFC PULLING FORCE: TBD
8. SHELF TIME OF THE MODULE: 2 YEARS.
9. () - REFENRENCE DIM; [ ] - INCH DIM.

| | | | | |
|---|---|---|---|---|
| PN: UST070HSRNNN00 | | | unisystem | |
| REV/DOC_VER: V1 / D1 | | | | |
| DRAWN: | M.K. | 22/09/2026 | 1:1.35 | |
| CHECKED: | MP | 22/09/2026 | [mm] | |
| APPR: | J.M. | 22/09/2026 | ISO A3 | P. 1 of 2 |

# 3. Absolute Maximum Ratings

| Item | Symbol | Min. | Max. | Unit |
|---|---|---|---|---|
| Supply Voltage | $V_{DD}$ | -0.3 | 3.96 | V |
| Storage temperature | $T_{STG}$ | -30 | +80 | °C |
| Operating temperature | $T_{OP}$ | -20 | +70 | °C |

Note 1: If Ta is below 50°C, the maximum humidity is 90%RH; if Ta is over 50°C, the absolute humidity shall not exceed that of 60%RH at 50°C.

Note 2: The response time will be extremely slow when the operating temperature is around -10°C or below, and the background will become darker during high-temperature operation.

# 4. DC Characteristics

| Item | Symbol | Min. | Typ. | Max. | Unit |
|---|---|---|---|---|---|
| Supply Voltage | $V_{DD}$ | 2.8 | 3.3 | 3.6 | V |
| Logic High level input voltage | $V_{IH}$ | 0.8*$V_{DD}$ | - | $V_{DD}$ | V |
| Logic Low level input voltage | $V_{IL}$ | GND | - | 0.2*$V_{DD}$ | V |
| Logic High level Output voltage | $V_{OH}$ | 0.9*$V_{DD}$ | - | $V_{DD}$ | V |
| Logic Low level Output voltage | $V_{OL}$ | GND | - | 0.1*$V_{DD}$ | V |
| Current Consumption (All White) | $I_{DD}$ | - | 132 | - | mA |

# 5. Backlight Characteristics

| Item | Symbol | Condition | Min. | Typ. | Max. | Unit |
|---|---|---|---|---|---|---|
| Forward Voltage | $V_F$ | Ta = 25°C, $I_F$ = 80mA / LED | 21.6 | 24 | 26.4 | V |
| Forward Current | $I_F$ | Ta = 25°C, $I_F$ = 80mA / LED | - | 240 | - | mA |
| Power Dissipation | $P_D$ | - | - | 5760 | - | mW |
| Uniformity | - | Avg | - | 80 | - | % |
| LED working life (25°C) | - | - | - | 100,000 | - | Hrs |
| Drive method | Constant current | | | | | |
| LED Configuration | 24 White LEDs (8 LEDs in string and 3 groups in parallel) | | | | | |

Note 1: LED lifetime is defined as the time until the brightness drops to 50% of its initial value.
The test is conducted under ambient air flow, at Ta = 25 ± 2°C, 60%RH ± 5%, $I_F$ = 80mA / LED.

# 6. Optical Characteristics

## 6.1 Optical Specifications

Ta = 25°C, Power = 3.3V

| | Item | | Symbol | Condition | Specification | | | Unit |
|---|---|---|---|---|---|---|---|---|
| | | | | | Min. | Typ. | Max. | |
| Backlight On (Transmissive Mode) | Luminance on TFT ($I_F$ = 80mA / LED) | | $L_v$ | | - | 2000 | - | cd / $m^2$ |
| | Contrast ratio (See 6.3) | | CR | | 700 | 1000 | - | |
| | Response time (See 6.2) | | $T_R + T_F$ | | - | 30 | 35 | ms |
| | Chromaticity Transmissive (See 6.5) | Red | $X_R$ | | 0.539 | 0.589 | 0.639 | |
| | | | $Y_R$ | | 0.323 | 0.373 | 0.423 | |
| | | Green | $X_G$ | | 0.255 | 0.305 | 0.355 | |
| | | | $Y_G$ | | 0.525 | 0.575 | 0.625 | |
| | | Blue | $X_B$ | | 0.079 | 0.129 | 0.179 | |
| | | | $Y_B$ | | 0.041 | 0.091 | 0.141 | |
| | | White | $X_W$ | | 0.230 | 0.280 | 0.330 | |
| | | | $Y_W$ | | 0.283 | 0.333 | 0.383 | |
| | Viewing Angle (See 6.4) | Horizontal | $\theta_{X+}$ | Center CR ≥ 10 | 70 | 80 | - | Deg. |
| | | | $\theta_{X-}$ | | 70 | 80 | - | |
| | | Vertical | $\phi_{Y+}$ | | 70 | 80 | - | |
| | | | $\phi_{Y-}$ | | 70 | 80 | - | |
| | NTSC Ratio (Gamut) | | | | 45 | 50 | - | % |

## 6.2 Definition of Response Time

### 6.2.1 Normally Black Type (Negative)

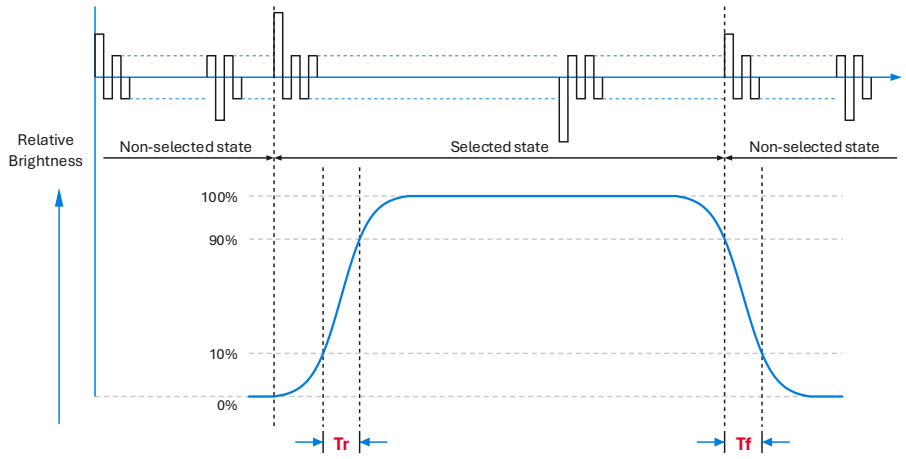


Tr is the time it takes to change from non-selected state with relative luminance 10% to selected state with relative luminance 90%.

Tf is the time it takes to change from selected state with relative luminance 90% to non-selected state with relative luminance 10%.

Note: Measuring machine: LCD-5100

### 6.2.2 Normally White Type (Positive)

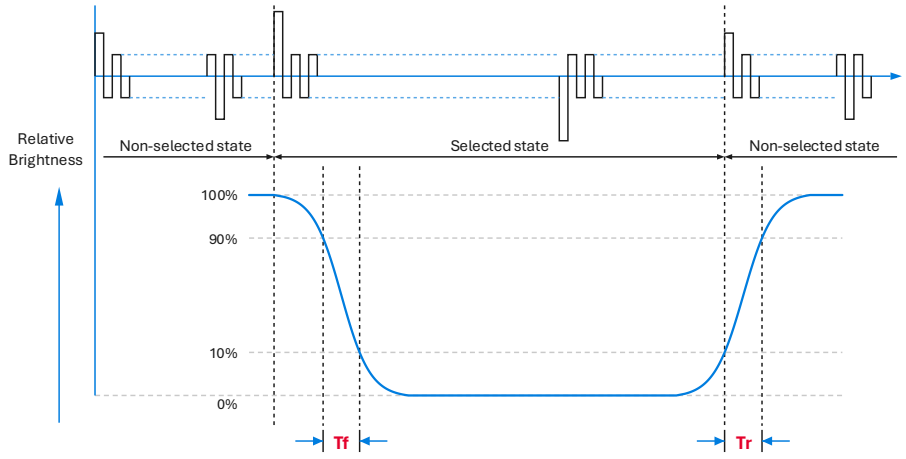


Tr is the time it takes to change from non-selected state with relative luminance 90% to selected state with relative luminance 10%.

Tf is the time it takes to change from selected state with relative luminance 10% to non-selected state with relative luminance 90%.

Note: Measuring machine: LCD-5100 or equivalent

## 6.3 Definition of Contrast Ratio

Contrast is measured perpendicularly to the display surface in transmissive mode.

The measurement condition is:

| | |
|---|---|
| Measuring Equipment | Eldim or equivalent |
| Measuring Point Diameter | 3mm / 1mm |
| Measuring Point Location | Active Area center point |
| Test pattern | A: All pixels white |
| | B: All pixels black |
| Contrast setting | Maximum |

Definition: CR (Contrast) = Luminance of White Pixel / Luminance of Black Pixel

## 6.4 Definition of Viewing Angles

Measuring machine: LCD-5100 or equivalent

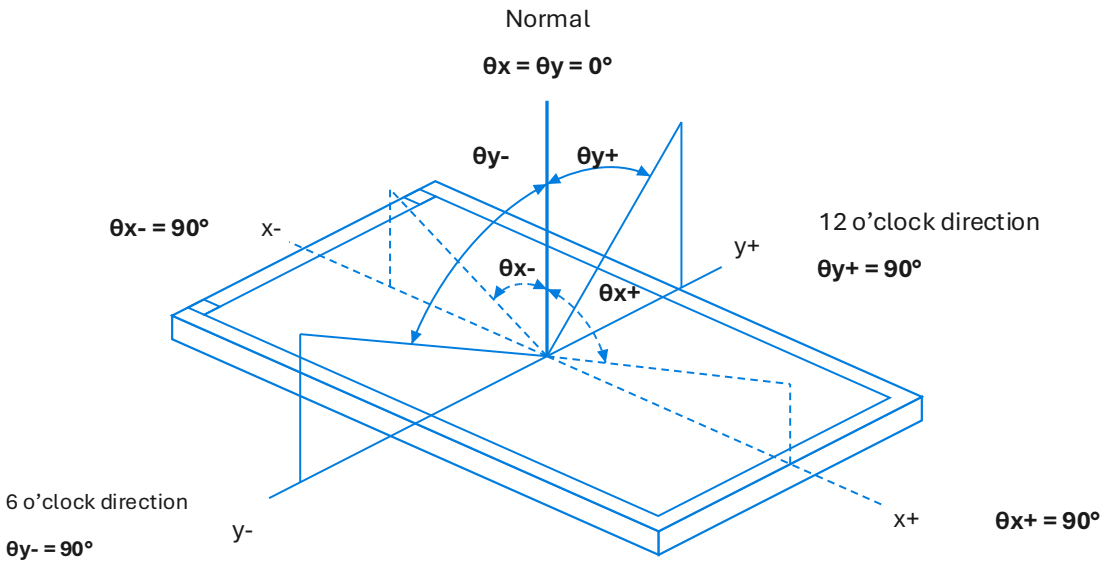

## 6.5 Definition of Color Appearance

R, G, B and W are defined by (x, y) coordinates on the CIE chromaticity diagram.

NTSC = area of RGB triangle / area of NTSC triangle x 100%

Measuring picture: Red, Green, Blue and White (Measuring machine: BM-7)

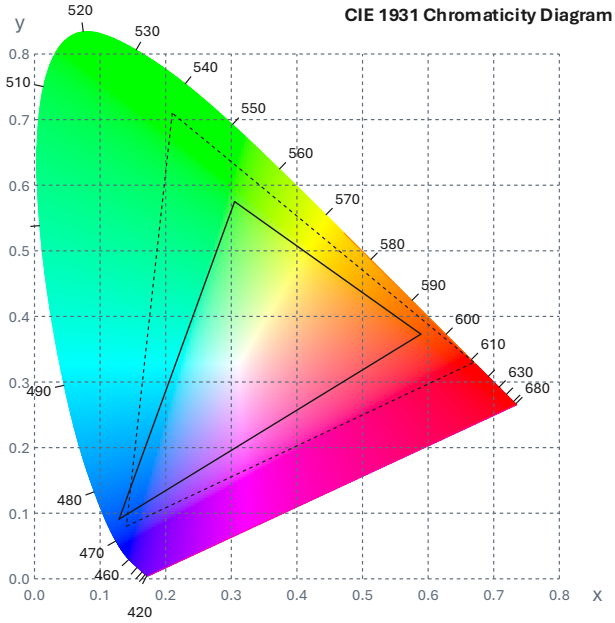

## 6.6 Definition of Surface Luminance, Uniformity and Transmittance

Using the transmissive mode measurement approach, measure the white screen luminance of the display panel and backlight.

Surface Luminance: $L_V$ = average ($L_{P1}$:$L_{P9}$)

Uniformity = Minimum ($L_{P1}$:$L_{P9}$) / Maximum ($L_{P1}$:$L_{P9}$) × 100%

Transmittance = $L_V$ on LCD / $L_V$ on Backlight × 100%

Note: Measuring machine: BM-7

Note: Test 3 brightness points below 3.5 inches (point 2 / 5 / 8), test 5 brightness points between 3.5–7 inches (point 1 / 3 / 5 / 7 / 9), and test 9 brightness points above 7 inches (point 1 to 9).

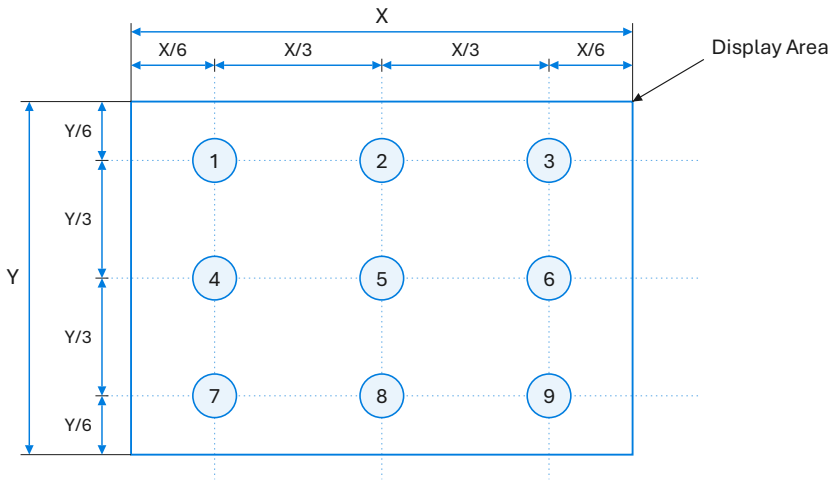


# 7. Block Diagram and Power Supply

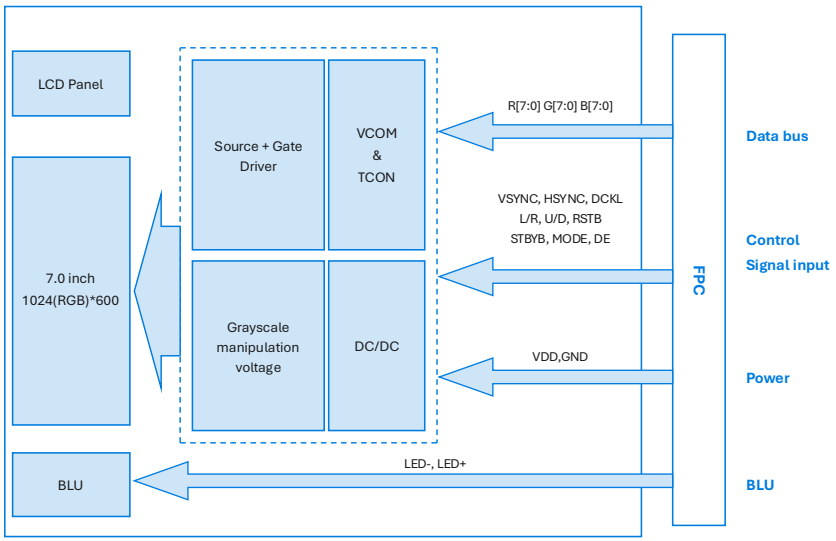

# 8. Interface Pins Definition

**LCM PIN:**

| No. | Symbol | Function |
|---|---|---|
| 1-2 | LED+ | LED Anode |
| 3-4 | LED- | LED Cathode |
| 5 | GND | Ground |
| 6 | NC | Not connect |
| 7 | $V_{DD}$ | Power supply |
| 8 | MODE | DE / SYNC mode selects H: DE mode. L: SYNC mode |
| 9 | DE | Data enable signal, active high to enable data |
| 10 | VSYNC | Vertical synchronizing signal |
| 11 | HSYNC | Horizontal synchronizing signal |
| 12-19 | B7-B0 | Blue data signal |
| 20-27 | G7-G0 | Green data signal |
| 28-35 | R7-R0 | Red data signal |
| 36 | GND | Ground |
| 37 | DCLK | Clock for input data |
| 38 | GND | Ground |
| 39 | L / R | Horizontal inversion [1)] |
| 40 | U / D | Vertical inversion [2)] |
| 41-43 | NC | Not connect |
| 44 | RSTB | Global reset pin |
| 45-46 | NC | Not connect |
| 47 | STBYB | Standby mode selection [3)] |
| 48 | GND | Ground |
| 49-50 | NC | Not connect |

**Note**

1) Horizontal inversion (Default pull Low)

| L / R | Function |
|---|---|
| 1 | Right → Left |
| 0 | Left → Right |

2) Vertical inversion (Default pull Low)

| U / D | Function |
|---|---|
| 1 | Bottom → Top |
| 0 | Top → Bottom |

3) Standby mode selection (Default pull High)

If not used, please fix this pin at $V_{DD}$ level.

| STBYB | Function |
|---|---|
| H | Normal mode |
| L | Standby mode |

# 9. Timing Characteristics

## 9.1 RGB Input Timing Table

| 24-bit parallel RGB Input Timing | Symbol | 1024RGBx600 | | | Unit |
|---|---|---|---|---|---|
| | | Min. | Typ. | Max. | |
| DCLK Frequency | - | 41.4 | 51.2 | 67.2 | MHZ |
| Horizontal Total | $t_{ht}$ | 1114 | 1344 | 1400 | DCLK |
| Hsync Pulse width | $t_{hs}$ | 1 | 24 | HBP-1 | DCLK |
| Horizontal Back Porch | $t_{hb}$ | 60 | 160 | 160 | DCLK |
| Horizontal Valid Data | $t_{hd}$ | | 1024 | | DCLK |
| Horizontal Front Porch | $t_{hfp}$ | 30 | 160 | 216 | DCLK |
| Vertical Total | $t_{vt}$ | 620 | 635 | 800 | THT |
| Vsync Pulse Width | $t_{vs}$ | 1 | 2 | VBP-1 | THT |
| Vertical Back Porch | $t_{vb}$ | 8 | 23 | 100 | THT |
| Vertical Valid Data | $t_{vd}$ | | 600 | | THT |
| Vertical Front Porch | $t_{vfp}$ | 12 | 12 | 100 | THT |

## 9.2 RGB Input Timing Diagram

### ● Horizontal timing

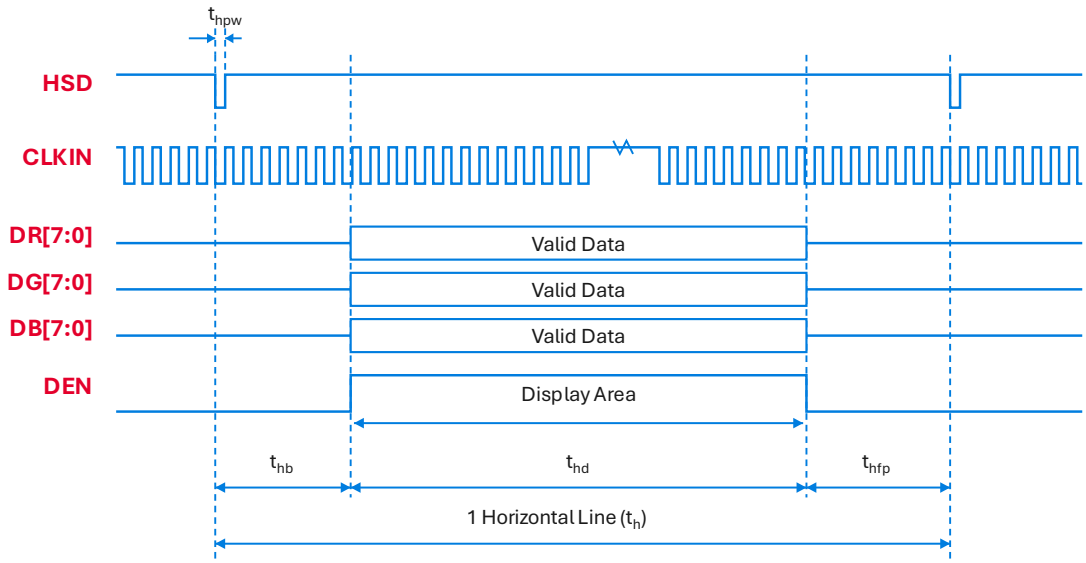


### ● Vertical timing

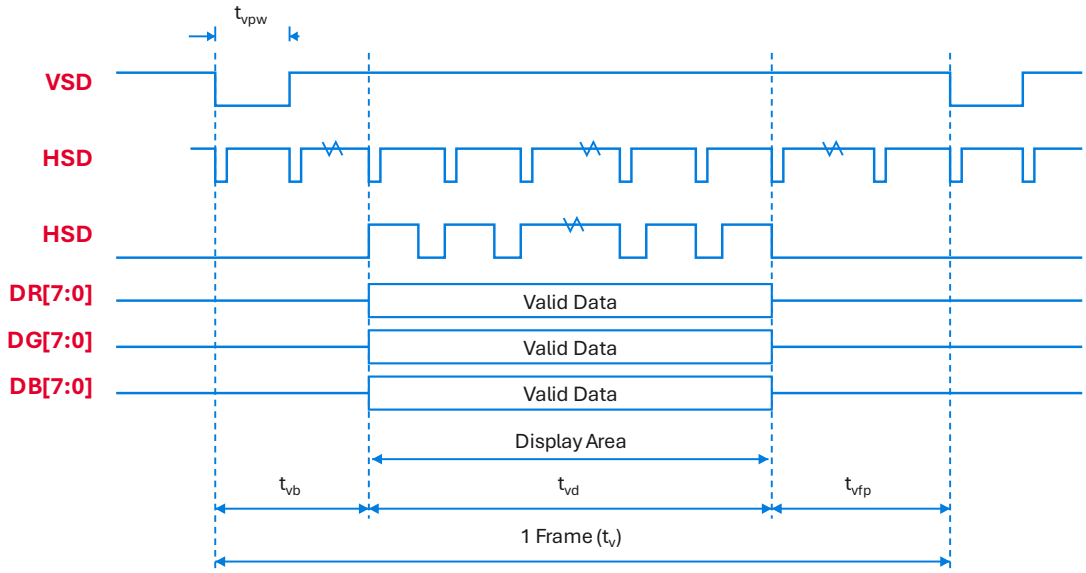


**24-bit parallel RGB mode horizontal/vertical input timing**

## 9.3 RGB AC Characteristics

Input data / sync parameters

| Parameter | Symbol | Spec. | | | Unit |
|---|---|---|---|---|---|
| | | Min. | Typ. | Max. | |
| CLKIN period | $T_{cph}$ | 14 | - | - | ns |
| CLKIN duty ratio | $T_{cw}$ | 40 | 50 | 60 | % |
| Data setup time | $T_{dsu}$ | 5 | - | - | ns |
| Data hold time | $T_{dhd}$ | 5 | - | - | ns |
| VSD setup time | $T_{ss}$ | 5 | - | - | ns |
| VSD hold time | $T_{sh}$ | 5 | - | - | ns |
| HSD setup time | $T_{ss}$ | 5 | - | - | ns |
| HSD hold time | $T_{sh}$ | 5 | - | - | ns |
| DEN setup time | $T_{ss}$ | 5 | - | - | ns |
| DEN hold time | $T_{sh}$ | 5 | - | - | ns |

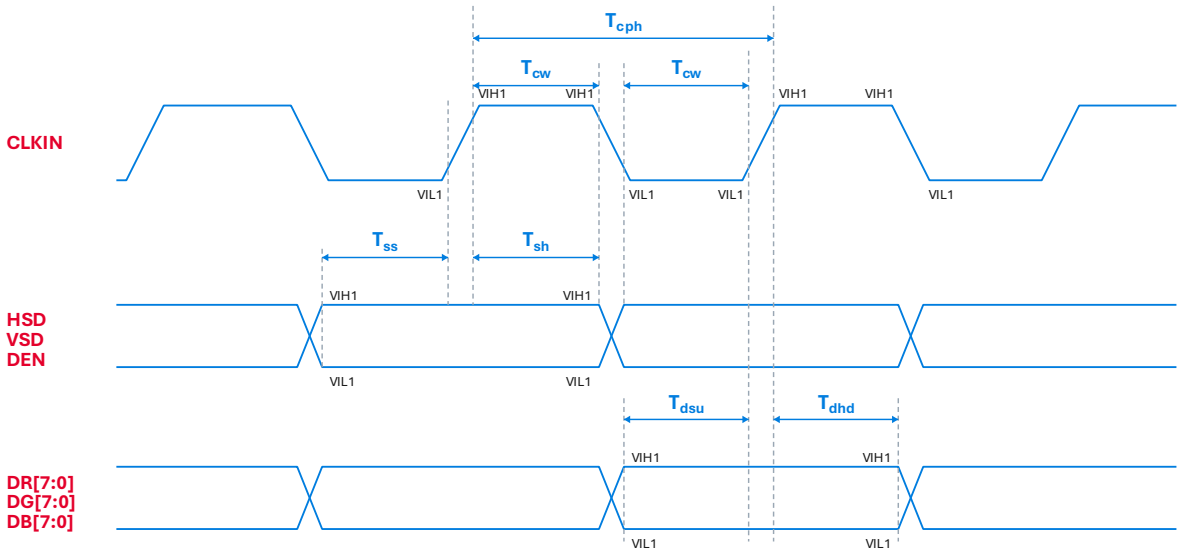


Input signal timing

# 10. Quality Assurance

## 10.1 Purpose

This Quality Assurance standard ensures the quality of LCD module products supplied to the customer.

## 10.2 Standard for Quality Test

**10.2.1** Sampling Plan:

GB/T2828.1-2012

Single sampling, general inspection level II

**10.2.2** Sampling Criteria:

Visual inspection: AQL 1.5

Electrical functional: AQL 0.65.

**10.2.3** Reliability Test:

For detailed requirements refer to Section 11 Reliability Specification.

## 10.3 Agreement Items

The following situations shall be negotiated with the customer:

**10.3.1** Any discrepancy in the standard of quality assurance.

**10.3.2** Additional requirements to be added to the product specification.

**10.3.3** Any other special problem.

## 10.4 Standard of the Product Visual Inspection

**10.4.1** Appearance inspection:

**10.4.1.1** The inspection must be carried out under an illumination of about 1000 – 1500 lx, and the viewing distance must be 30 cm ± 2 cm.

**10.4.1.2** The viewing angle should be 45° from the vertical line without reflected light, or follow the customer's viewing angle specifications.

**10.4.1.3** Definition of area: A Zone: Active Area, B Zone: Viewing Area.

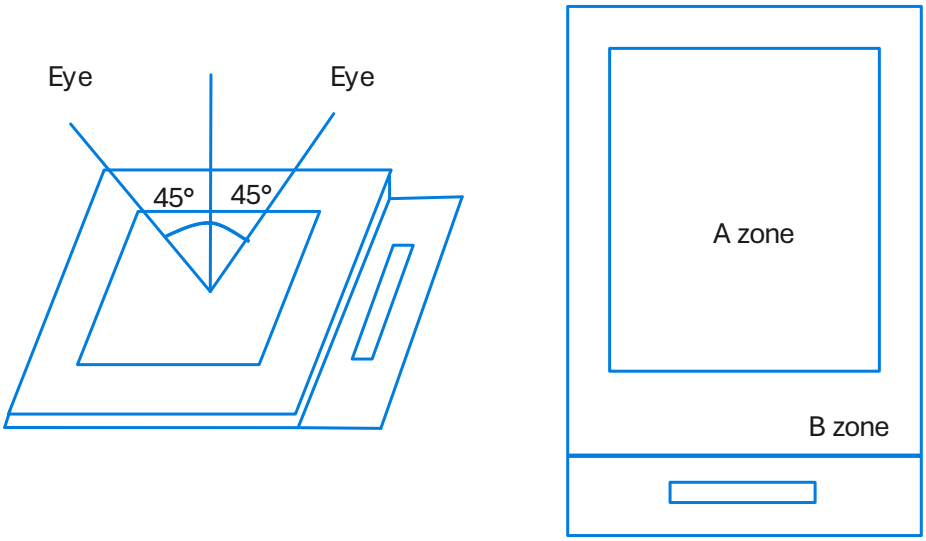


**10.4.2** Basic principle:

**10.4.2.1** A set of samples to indicate the limit of acceptable quality level must be discussed by both us and the customer when a dispute occurs.

**10.4.2.2** New items must be added when necessary.

## 10.5 Inspection Specification

<table>
<tr><th>No.</th><th>Item</th><th>Criteria (Unit: mm)</th></tr>
<tr><td>01</td><td>Black / White spot<br>Foreign material (Round type)<br>Pinholes Stain<br>Particles inside cell.<br>(Minor defect)</td><td>
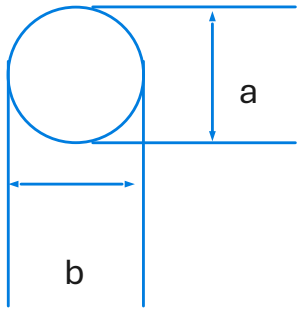

<table>
<tr><th>Area / Size</th><th>Acc. Qty</th></tr>
<tr><td>ϕ ≤ 0.20</td><td>Ignore</td></tr>
<tr><td>0.20 < ϕ ≤ 0.50</td><td>N ≤ 3</td></tr>
<tr><td>0.50 < ϕ</td><td>0</td></tr>
</table>
ϕ = (a + b) / 2<br>The distance between 2 defects should be more than 5 mm.
</td></tr>
</table>

<table>
<tr><th>No.</th><th>Item</th><th>Criteria (Unit: mm)</th></tr>
<tr><td>02</td><td>Electrical Defect<br>(Major defect)</td><td>
<table>
<tr><td rowspan="2">Bright dot</td><td>Display Area</td><td>Total</td><td rowspan="3">Note 1</td></tr>
<tr><td>N ≤ 2</td><td>N ≤ 2</td></tr>
<tr><td>Dark dot</td><td>N ≤ 4</td><td>N ≤ 4</td></tr>
<tr><td>Total dot</td><td>N ≤ 4</td><td>N ≤ 4</td></tr>
<tr><td>Mura</td><td colspan="2">Not visible through 3% ND filters.</td><td>Note 2</td></tr>
</table>
<br>Remark:<br>1. A bright dot caused by a scratch or a foreign object is judged according to item 01.
</td></tr>
<tr><td>03</td><td>Black and White line<br>Scratch<br>Foreign material (Line type)<br>(Minor defect)</td><td>
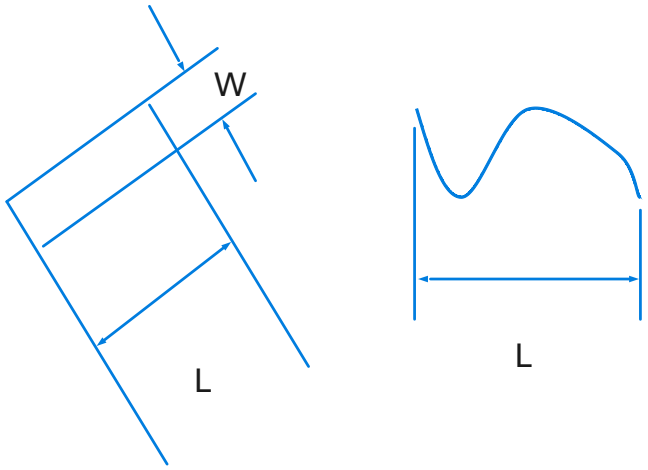

<table>
<tr><th>Length</th><th>Width</th><th>Acc. Qty</th></tr>
<tr><td>/</td><td>W ≤ 0.1</td><td>Ignore</td></tr>
<tr><td>L ≤ 2.5</td><td>0.1 < W ≤ 0.2</td><td>3</td></tr>
<tr><td>L > 2.5</td><td>0.2 < W</td><td>0</td></tr>
<tr><td colspan="2">Total</td><td>3</td></tr>
</table>
<br>The distance between 2 defects should be more than 3 mm. Scratches not viewable through the back of the display are acceptable.
</td></tr>
<tr><td>04</td><td>Glass Crack<br>(Major defect)</td><td>
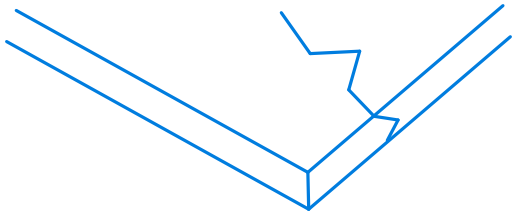
<br>Cracks of any type are not allowed, as a crack may enlarge.
</td></tr>
</table>

<table>
<tr><th>No.</th><th>Item</th><th>Criteria (Unit: mm)</th></tr>
<tr><td>05</td><td>Glass Chipping Pad Area:<br>(Minor defect)</td><td>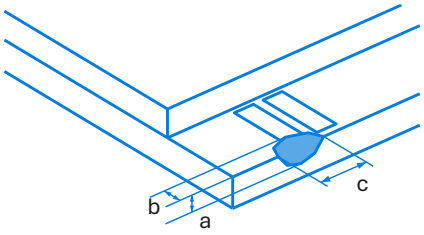

<table>
<tr><th>Length and Width</th><th>Acc. Qty</th></tr>
<tr><td>c > 3.0, b < 1.0</td><td>1</td></tr>
<tr><td>c < 3.0, b < 1.0</td><td>3</td></tr>
<tr><td colspan="2">a < Glass Thickness</td></tr>
</table></td></tr>
<tr><td>06</td><td>Glass Chipping Rear of Pad Area:<br>(Minor defect)</td><td>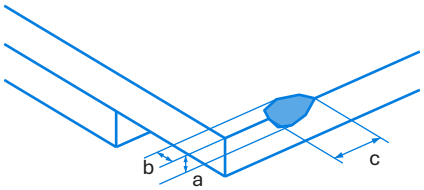

<table>
<tr><th>Length and Width</th><th>Acc. Qty</th></tr>
<tr><td>c > 3.0, b < 1.0</td><td>1</td></tr>
<tr><td>c < 3.0, b < 1.0</td><td>2</td></tr>
<tr><td>c < 3.0, b < 0.5</td><td>4</td></tr>
<tr><td colspan="2">a < Glass Thickness</td></tr>
</table></td></tr>
<tr><td>07</td><td>Glass Chipping Except Pad Area:<br>(Minor defect)</td><td>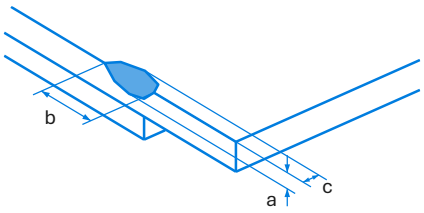

<table>
<tr><th>Length and Width</th><th>Acc. Qty</th></tr>
<tr><td>c > 3.0, b < 1.0</td><td>1</td></tr>
<tr><td>c < 3.0, b < 1.0</td><td>2</td></tr>
<tr><td>c < 3.0, b < 0.5</td><td>4</td></tr>
<tr><td colspan="2">a < Glass Thickness</td></tr>
</table></td></tr>
<tr><td>08</td><td>Glass Corner Chipping:<br>(Minor defect)</td><td>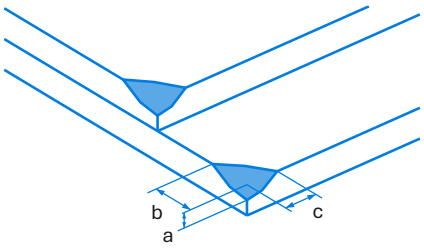

<table>
<tr><th>Length and Width</th><th>Acc. Qty</th></tr>
<tr><td>c < 3.0, b < 3.0</td><td>Ignore</td></tr>
<tr><td colspan="2">a < Glass Thickness</td></tr>
</table></td></tr>
</table>

<table>
<tr><th>No.</th><th>Item</th><th>Criteria (Unit: mm)</th></tr>
<tr><td>09</td><td>Glass Burr:<br>(Minor defect)</td><td>
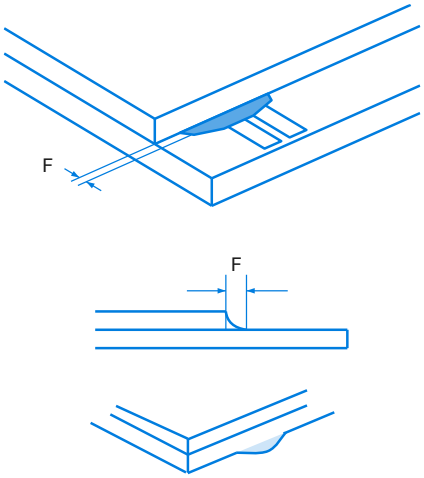

<table>
<tr><th>Length</th><th>Acc. Qty</th></tr>
<tr><td>F < 1.0</td><td>Ignore</td></tr>
</table>
Glass burr must not affect assembly and module dimensions.
</td></tr>
<tr><td>10</td><td>FPC Defect:<br>(Minor defect)</td><td>
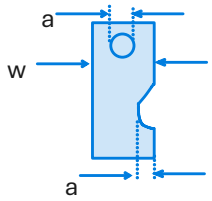

10.1 Dent, pinhole width a < w / 3. (w: circuitry width.)<br>
10.2 Open circuit is unacceptable.<br>
10.3 No oxidation, contamination and distortion.
</td></tr>
<tr><td>11</td><td>Bubble on Polarizer<br>(Minor defect)</td><td>
<table>
<tr><th>Diameter</th><th>Acc. Qty</th></tr>
<tr><td>ϕ ≤ 0.30</td><td>Ignore</td></tr>
<tr><td>0.30 < ϕ ≤ 0.50</td><td>N ≤ 2</td></tr>
<tr><td>0.50 < ϕ</td><td>N = 0</td></tr>
</table>
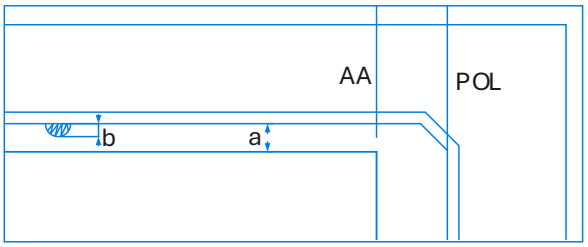

b < 1 / 2a<br>
Note: In high-temperature and high-humidity experiments, bubbles do not disperse.
</td></tr>
</table>

<table>
<tr><th>No.</th><th>Item</th><th>Criteria (Unit: mm)</th></tr>
<tr><td>12</td><td>Dent on Polarizer<br>(Minor defect)</td><td>
<table>
<tr><th>Diameter</th><th>Acc. Qty</th></tr>
<tr><td>ϕ ≤ 0.25</td><td>Ignore</td></tr>
<tr><td>0.25 < ϕ ≤ 0.50</td><td>N ≤ 4</td></tr>
<tr><td>0.50 < ϕ</td><td>None</td></tr>
</table>
</td></tr>
<tr><td>13</td><td>Bezel</td><td>13.1 No rust or distortion on the bezel.<br>13.2 No visible fingerprints, stains or other contamination.</td></tr>
<tr><td>14</td><td>PCB</td><td>14.1 No distortion or contamination on PCB terminals.<br>14.2 All components on the PCB must be the same as documented on the BOM / component layout.<br>14.3 Follow IPC-A-600F.</td></tr>
<tr><td>15</td><td>Soldering</td><td>Follow the IPC-A-610C standard.</td></tr>
<tr><td>16</td><td>Electrical Defect<br>(Major defect)</td><td>The following defects must be rejected:<br>16.1 Missing vertical / horizontal line.<br>16.2 Abnormal Display.<br>16.3 No function or no display.<br>16.4 Current exceeds product specifications.<br>16.5 LCD viewing angle defect.<br>16.6 No Backlight.<br>16.7 Dark Backlight.</td></tr>
</table>

Remark: A broken LCD panel shall be rejected. Defects outside the LCD viewing area are acceptable.

## 10.6 Classification of Defects

**10.6.1** Visual defects (except missing / wrong label) are treated as minor defects, and electrical defects as major defects.

**10.6.2** Two minor defects are equal to one major defect in lot sampling inspection.

## 10.7 Identification / Marking Criteria

Any unit with illegible, wrong, double or missing marking / label shall be rejected.

## 10.8 Packing

**10.8.1** There should be no damage to the outer carton box; each packaging box should have one identical label.

**10.8.2** Modules inside the package box should have a compliance mark.

**10.8.3** All direct package materials shall offer ESD protection.

Note 1: Bright dot is defined as a dot whose defective area is larger than 50% of one sub-pixel area.

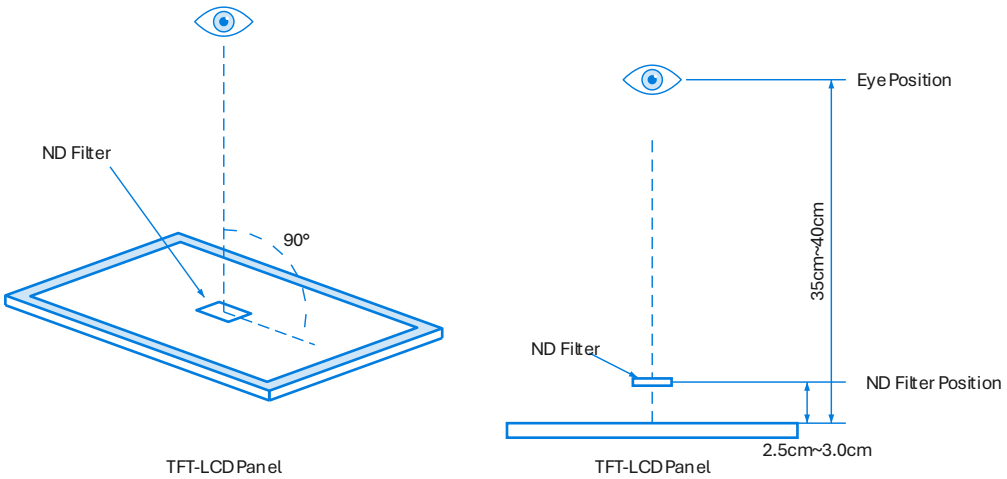


Bright dot: a dot-size bright defect on a black display pattern. It can be recognized through a 2% transmittance filter at an eye-to-panel distance of 350 mm ± 50 mm.

Dark dot: a cyan, magenta or yellow dot-size defect on a white display pattern. It can be recognized through a 3% transmittance filter at an eye-to-panel distance of 350 mm ± 50 mm.

Note 2: Mura — areas of the display that appear darker / brighter than the surrounding background.

# 11. Reliability Specification

| No. | Item | Condition | Quantity | Criteria |
|---|---|---|---|---|
| 1 | High Temperature Operating | 70°C, 96Hrs | 2 | GB/T2423.2 -2008 |
| 2 | Low Temperature Operating | -20°C, 96Hrs | 2 | GB/T2423.1 -2008 |
| 3 | High Humidity Storage | 60°C, 90%RH, 96Hrs | 2 | GB/T2423.3 -2016 |
| 4 | High Temperature Storage | 80°C, 96Hrs | 2 | GB/T2423.2 -2008 |
| 5 | Low Temperature Storage | -30°C, 96Hrs | 2 | GB/T2423.1 -2008 |
| 6 | Thermal Cycling Test Storage | -20°C ↔ 70°C 30 min<br>5 min 30 min<br>after 5 cycle, Restore 2H at 25°C<br>Power off | 2 | GB/T2423.22 -2012 |
| 7 | Packing vibration | Frequency range: 10Hz ~ 50Hz<br>Acceleration of gravity: 5G<br>X, Y, Z: 30 min for each direction. | - | GB/T5170.14 -2009 |
| 8 | Electrostatic Discharge | Air: ±4kV, 150pF / 330Ω<br>Contact: ±2kV, 150pF / 330Ω | 2 | GB/T17626.2 -2018 |
| 9 | Drop Test<br>(Packaged) | Height: 72cm (weight ≤ 10kg), 60cm (weight > 10kg),<br>1 corner, 3 edges, 6 surfaces. | - | GB/T2423.7 -2018 |

Note 1: No cosmetic defects and no loss of operational function are allowed.

Note 2: The total current consumption should be below twice the initial value.

# 12. Precautions

## 12.1 Safety

**12.1.1** The liquid crystal in the LCD is poisonous. Do not put it in your mouth. If the liquid crystal touches your skin or clothes, wash it off immediately using soap and water.

**12.1.2** Since the liquid crystal cells are made of glass, do not subject them to strong impacts. Handle with care.

## 12.2 Handling

**12.2.1** Store and use within ratings in order to keep performance and prevent damage.

**12.2.2** Do not wipe the polarizer with a dry cloth, as it might cause scratches. If the surface of the LCD needs to be cleaned, wipe it swiftly with cotton or another soft cloth soaked with IPA or petroleum benzine; do not use other chemicals.

## 12.3 Storage

**12.3.1** Do not store the LCD module beyond the specified temperature ranges.

**12.3.2** Strong light exposure causes degradation of the polarizer and color filter.

## 12.4 Operation

**12.4.1** Response time will increase at lower temperatures.

**12.4.2** The display may change color at different temperatures.

**12.4.3** Mechanical disturbance during operation, such as pressing on the display area, may cause temporary display non-uniformity.

**12.4.4** Do not connect or disconnect the LCM to or from the system when power is on.

**12.4.5** Never use the LCM under abnormal conditions of high temperature and high humidity.

**12.4.6** The module has high-frequency circuits. Sufficient suppression of electromagnetic interference shall be provided by the system manufacturer. Grounding and shielding methods may be important to minimize the interference.

**12.4.7** Do not display a fixed pattern for a long time (we recommend no longer than one hour), as it may cause image sticking due to the TFT structure.

## 12.5 Static Electricity

**12.5.1** This unit contains CMOS LSIs, so care must be taken to avoid electrostatic charge, e.g. by grounding the human body.

**12.5.2** The normal static prevention measures should be observed for work clothes and benches.

**12.5.3** The module should be kept in anti-static bags or other containers resistant to static for storage.

# 13. Legal Information

**CE Marking**

CE marking is obligatory only for complete end products. Unisystem display modules are semifinished goods designed to be integrated into finished devices and, therefore, are not CE marked.

**Warranty**

Unisystem grants a warranty for the proper operation of the goods for a period of 24 months from the date of delivery. If, as a result of a warranty claim, the customer receives a defect-free item as a replacement, the warranty period shall start anew from the moment the replacement is received.

**Right to Change Specifications**

Unisystem reserves the right to make changes to the product specifications, dimensions, and materials without prior notice in order to improve reliability, function, or design. It is the buyer's responsibility to verify that the datasheet is current before placing an order.

**Intellectual Property**

This document and the technical information herein are the exclusive property of Unisystem and may be subject to pending or granted patents. Reproduction or disclosure of this document without prior written permission is strictly prohibited. No intellectual property licenses are implicitly conveyed.

**Limitation of Liability**

Images and graphics used in this document are for illustrative purposes only. Unisystem shall not be liable to the buyer or any third party for any indirect, incidental, special, or consequential damages (including, without limitation, lost profits or business opportunities) arising from the use of its products or services.

**High-Risk Applications Disclaimer**

Unisystem products are not designed, intended, or authorized for use in safety-critical or high-risk applications where failure could directly result in personal injury, death, or severe environmental damage (e.g., life support machines, aerospace navigation, nuclear facilities). Using Unisystem products in such high-risk activities is entirely at the buyer's risk, and the buyer agrees to fully indemnify and hold Unisystem harmless from any damages or claims resulting from such unauthorized use.

## 14. Contact Information

**UNISYSTEM SP. Z O.O.**

Nowy Świat 36
80-299 Gdańsk
Poland

*+48 58 761 54 20*
office@unisystem.com

*EU VAT No.:*
*PL5842741076*